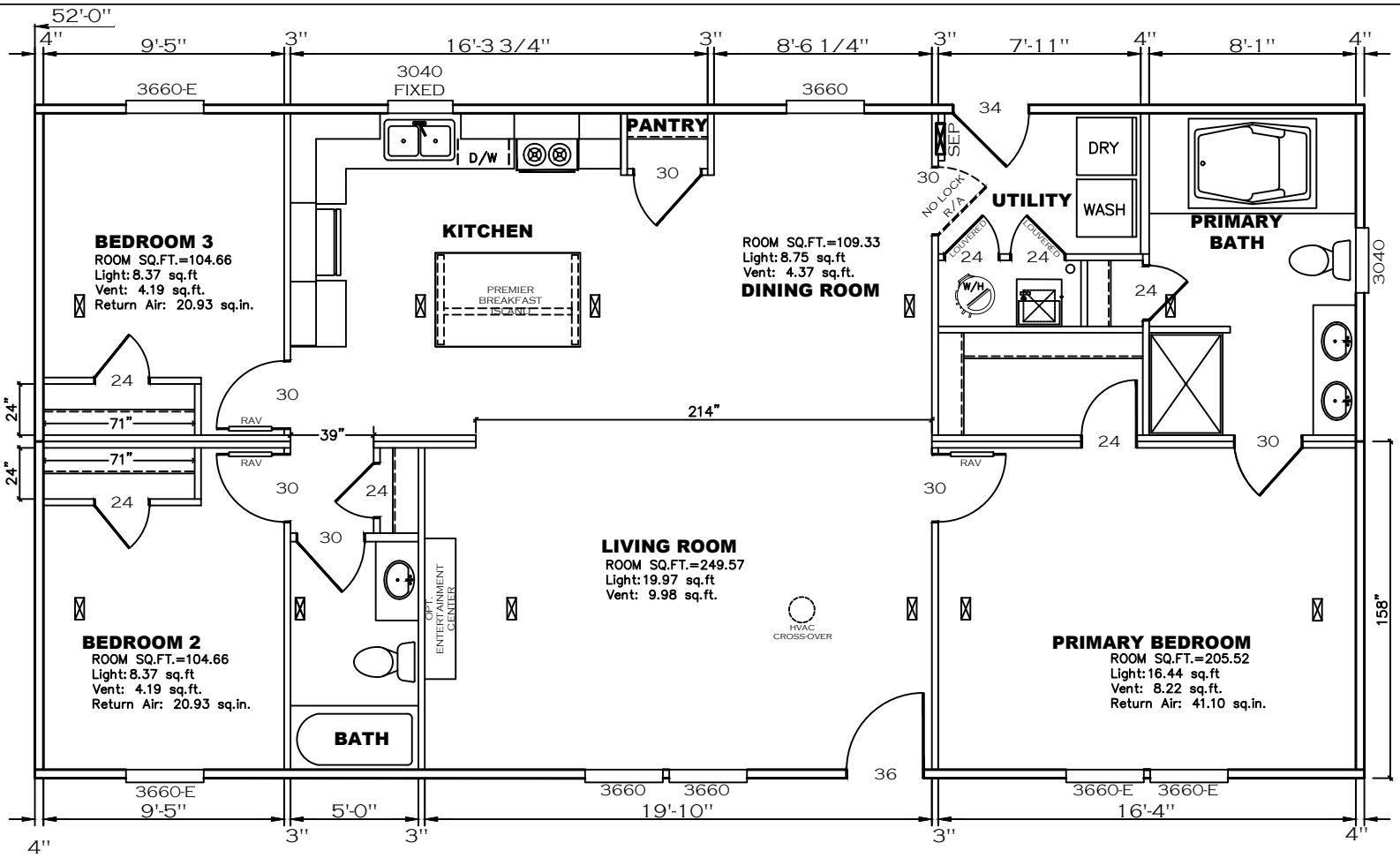

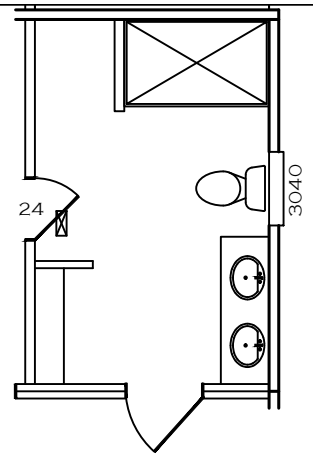

OPT. 60" SHOWER PRIMARY BATH

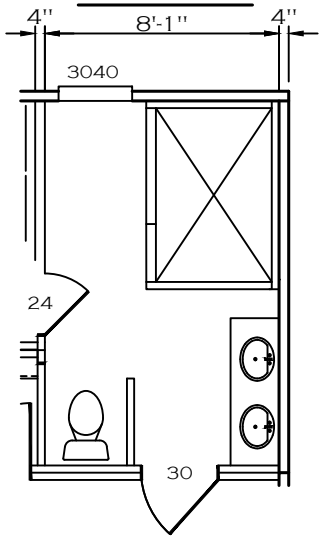

PRIMARY BATH 72" SHOWER OPTION

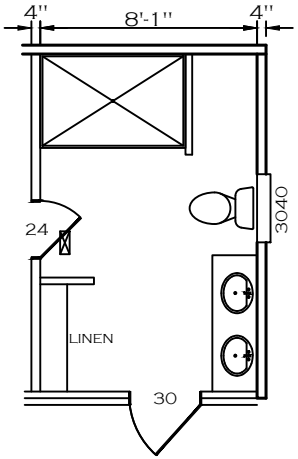

PRIMARY BATH 65" SHOWER OPTION

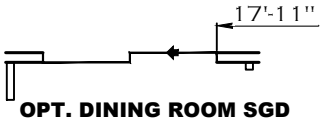

OPT. DINING ROOM SGD

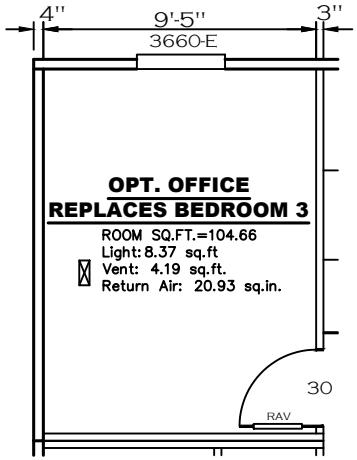

OPT. OFFICE REPLACES BEDROOM 3

ROOM SQ.FT.=104.66
Light: 8.37 sq.ft
Vent: 4.19 sq.ft.
Return Air: 20.93 sq.in.

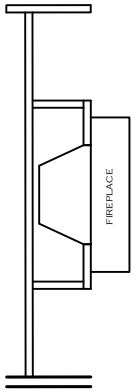

OPT. LIVING ROOM FIREPLACE

SHEET: FP	FLOOR PLAN	Clayton Clayton - 934 1420 Mountain Rd, Andersonville, TN 37705 PH: 865.494.7800 FAX: 865.494.0243	HILBORN,WERNER,CARTER, AND ASSOCIATES, INC. 1627 SOUTH MYRTLE AVE. CLEARWATER, FL. 33756	DRAWING #: 34M401 MODEL #: MTN28523A DATE: 4/2/2026 SCALE: N.T.S.	MODEL: MOUNTAINEER 52 (28'X52') SERIES: MOUNTAINEER PRODUCT DESIGNER: BRIAN K. RIFFEY	STD PLAN "CONDITIONED": 1,369 FT² REV. BY: REV. DATE:

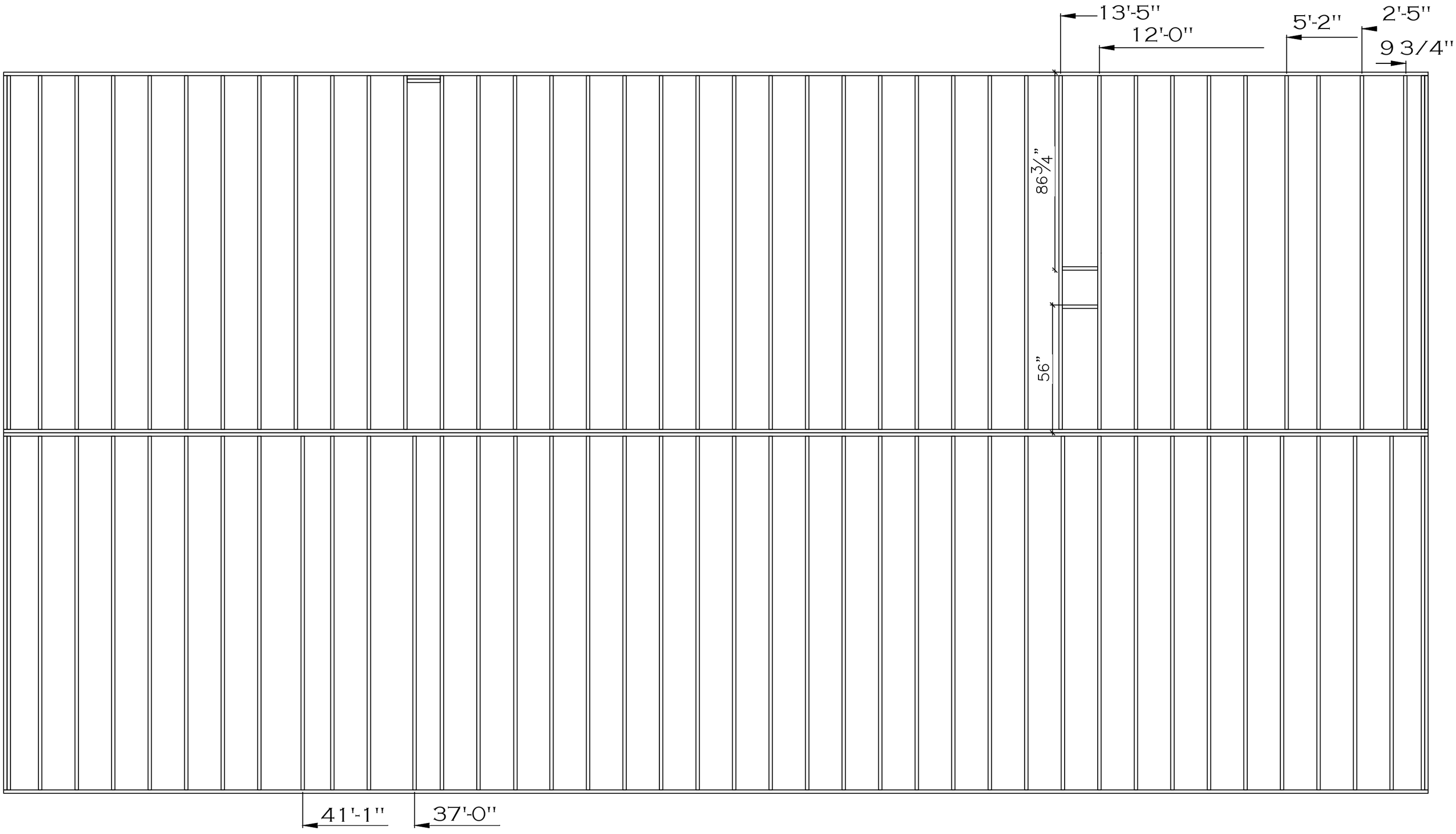

REV #	DATE	DESCRIPTION

SHEET: FJIG

FLOOR JOIST PLAN

Clayton Clayton - 934
1420 Mountain Rd, Andersonville, TN 37705
PH: 865.494.7800 FAX: 865.494.0243

HILBORN, WERNER, CARTER, AND ASSOCIATES, INC.
1627 SOUTH MYRTLE AVE.
CLEARWATER, FL. 33756

DRAWING #: 34M401
MODEL #: MTN28523A
DATE: 05/16/2026
SCALE: N.T.S.

MODEL: MOUNTAINEER (28'X48')
SERIES: MOUNTAINEER
PRODUCT DESIGNER: BRIAN K. RIFFEY

STD PLAN "CONDITIONED": 1,264 FT²
REV. BY:
REV. DATE:

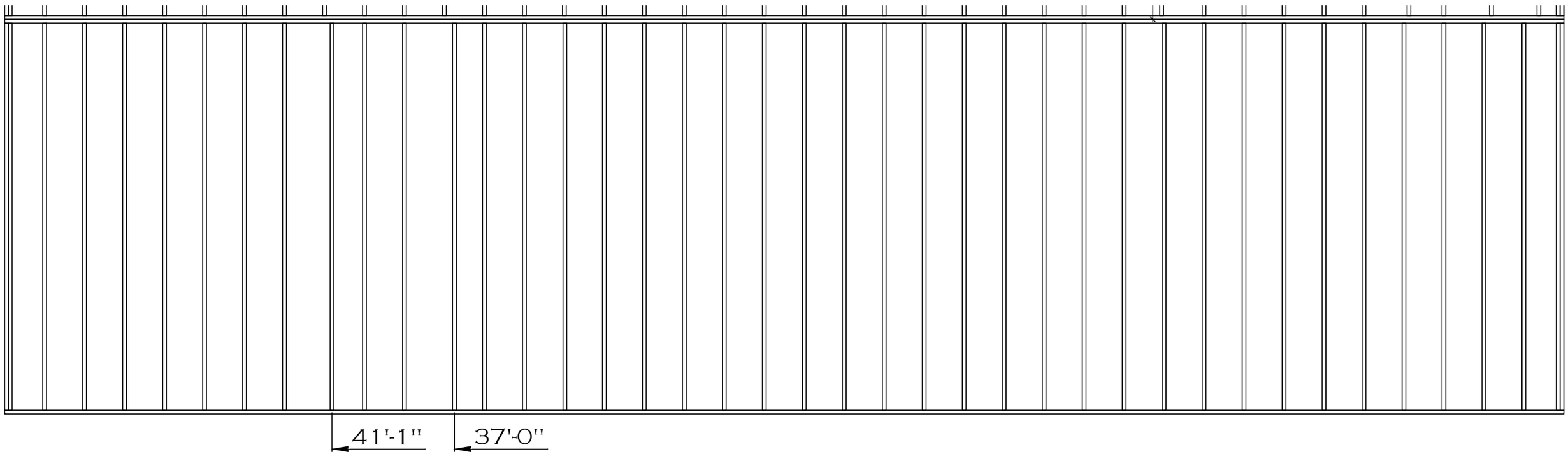

REV #	DATE	DESCRIPTION

SHEET: FJIG

FLOOR JOIST PLAN A HALF

Clayton Clayton - 934
1420 Mountain Rd, Andersonville, TN 37705
PH: 865.494.7800 FAX: 865.494.0243

HILBORN,WERNER,CARTER, AND ASSOCIATES, INC.
1627 SOUTH MYRTLE AVE.
CLEARWATER, FL. 33756

DRAWING #: 34M401
MODEL #: MTN28523A
DATE: 4/2/2026
SCALE: N.T.S.

MODEL: MOUNTAINEER 52 (28'X52')
SERIES: MOUNTAINEER
PRODUCT DESIGNER: BRIAN K. RIFFEY

STD PLAN "CONDITIONED": 1,369 FT²
REV. BY:
REV. DATE:

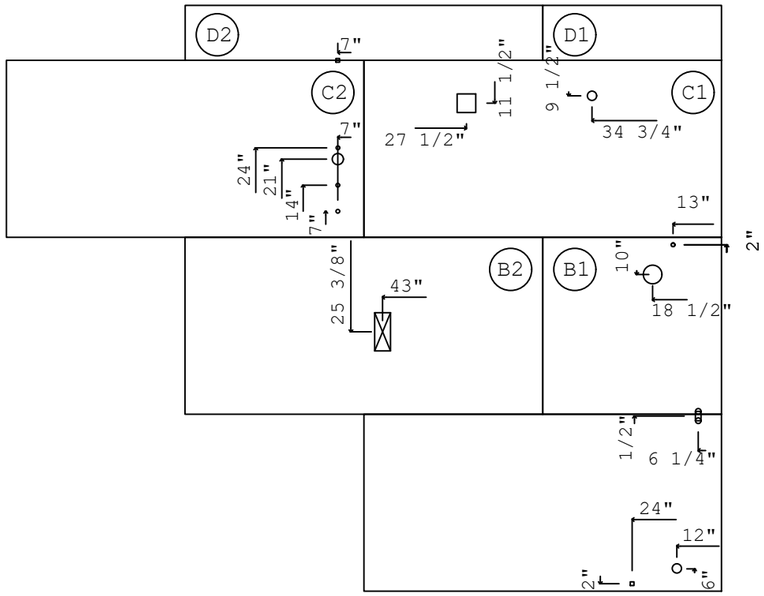

HANDICAP SHOWER OPTION

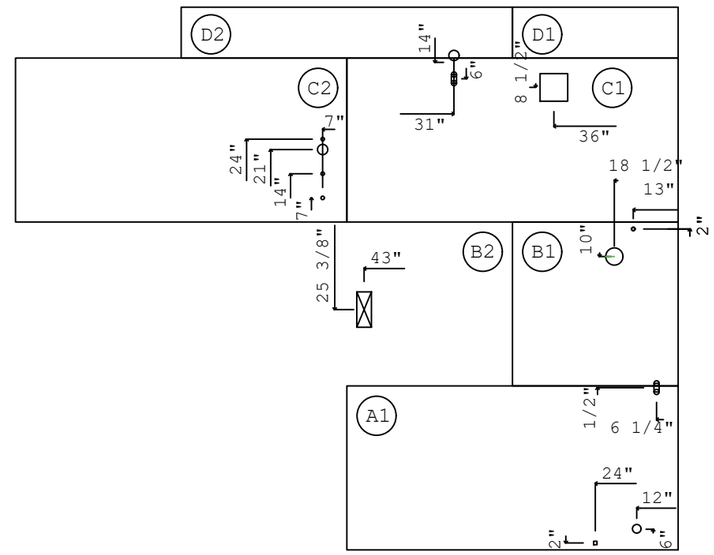

OPT. PRIMARY BATH 60" SHOWER

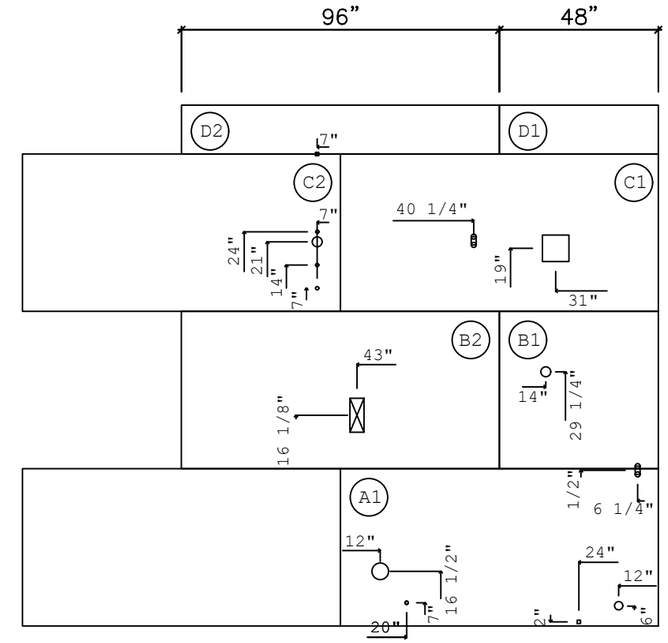

PRIMARY BATH 72" SHOWER

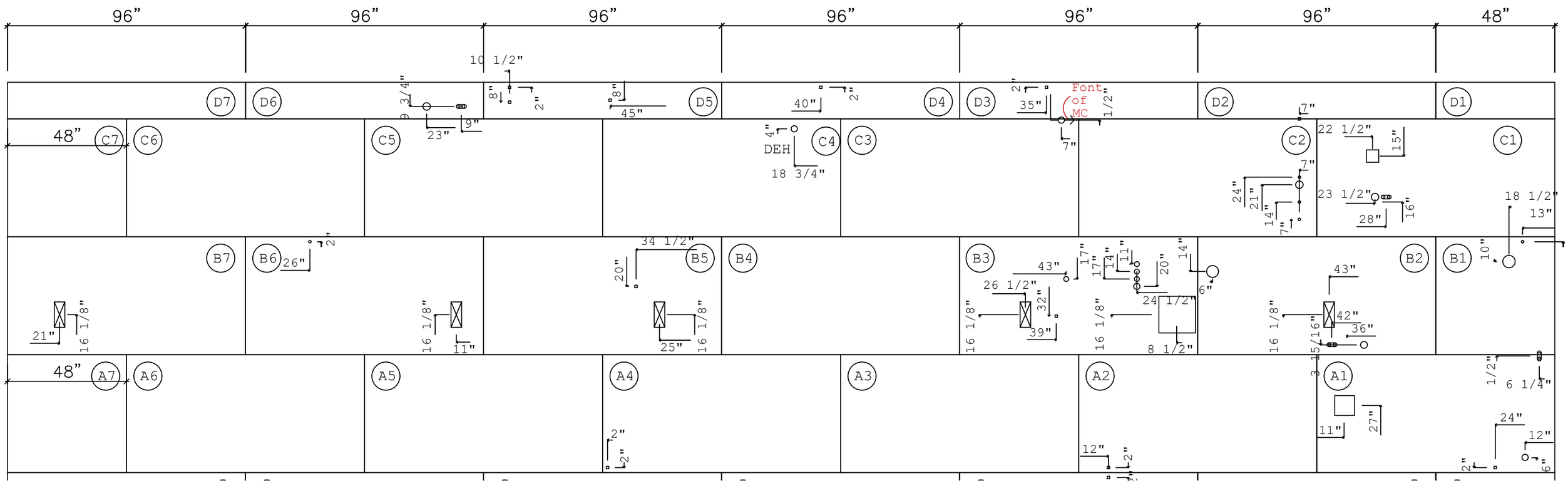

SHEET: DECK	FLOOR DECKING B HALF PLAN 2x6	Clayton Clayton - 934 1420 Mountain Rd, Andersonville, TN 37705 PH: 865.494.7800 FAX: 865.494.0243	HILBORN,WERNER,CARTER, AND ASSOCIATES, INC. 1627 SOUTH MYRTLE AVE. CLEARWATER, FL. 33756	DRAWING #: 34M401 MODEL #: MTN28523A DATE: 5/20/2026 SCALE: N.T.S.	MODEL: MOUNTAINEER 52 (28'X52') SERIES: MOUNTAINEER PRODUCT DESIGNER: BRIAN K. RIFFEY	STD PLAN "CONDITIONED": 1,369 FT² REV. BY: REV. DATE:

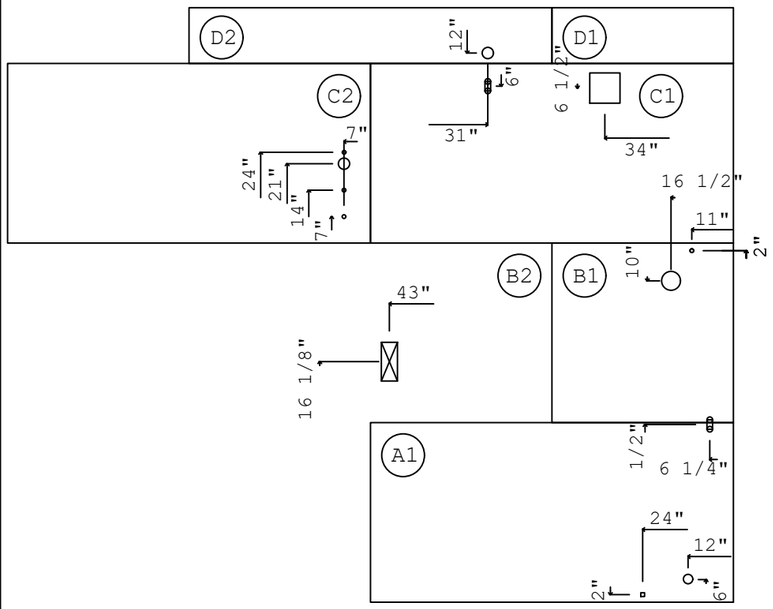

OPT. PRIMARY BATH 60" SHOWER

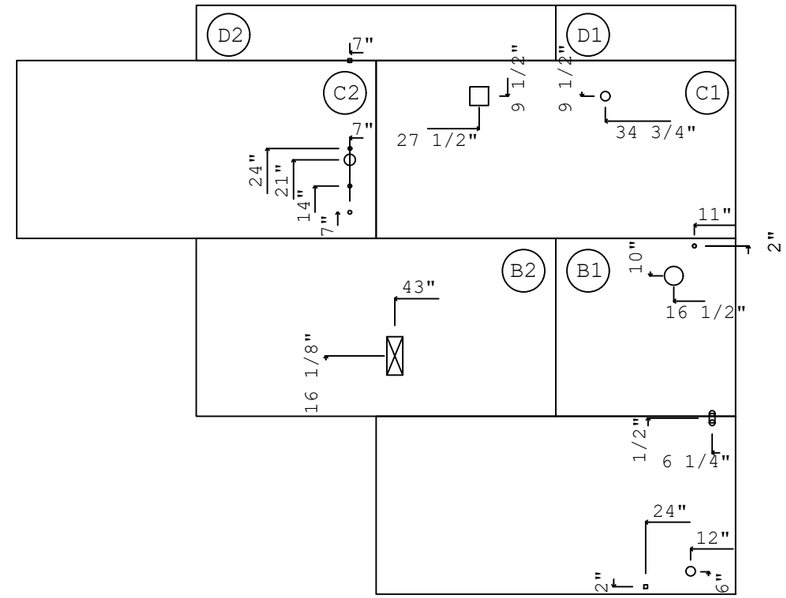

HANDICAP SHOWER OPTION

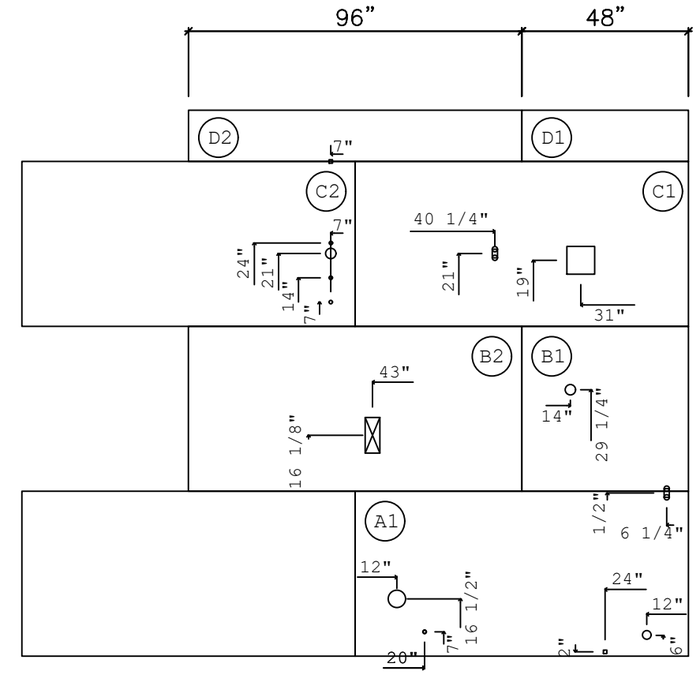

PRIMARY BATH 72" SHOWER

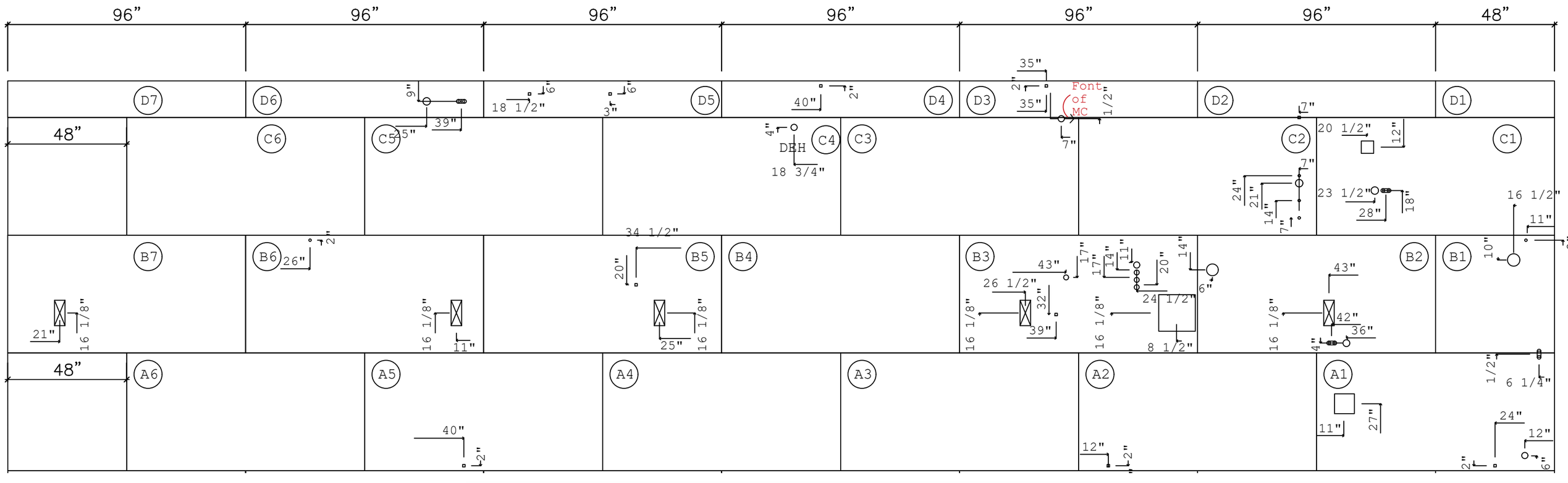

SHEET: DECK	FLOOR DECK B HALF PLAN 2x4	Clayton Clayton - 934 1420 Mountain Rd, Andersonville, TN 37705 PH: 865.494.7800 FAX: 865.494.0243	HILBORN,WERNER,CARTER, AND ASSOCIATES, INC. 1627 SOUTH MYRTLE AVE. CLEARWATER, FL. 33756	DRAWING #: 34M401	MODEL: MOUNTAINEER 52 (28'X52')	STD PLAN "CONDITIONED": 1,369 FT²
				MODEL #: MTN28523A	SERIES: MOUNTAINEER	REV. BY:
				DATE: 5/20/2026 SCALE: N.T.S.	PRODUCT DESIGNER: BRIAN K. RIFFEY	REV. DATE:

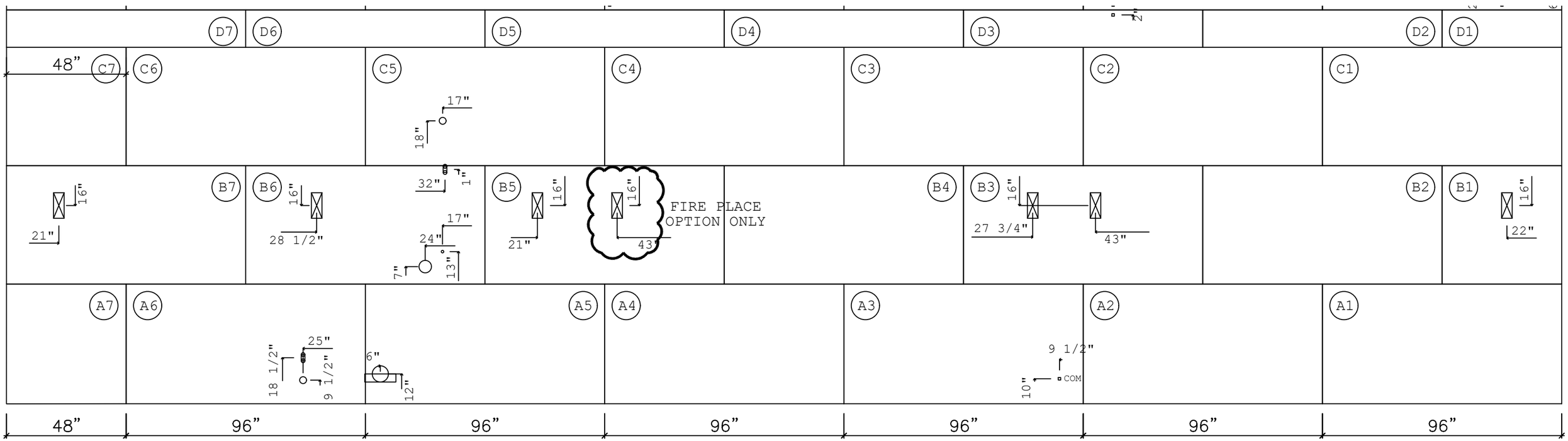

SHEET:						
DECK	FLOOR DECKING A HALF PLAN 2x6	Clayton - 934 1420 Mountain Rd, Andersonville, TN 37705 PH: 865.494.7800 FAX: 865.494.0243	HILBORN,WERNER,CARTER, AND ASSOCIATES, INC. 1627 SOUTH MYRTLE AVE. CLEARWATER, FL. 33756	DRAWING #: 34M401 MODEL #: MTN28523A DATE: 5/20/2026 SCALE: N.T.S.	MODEL: MOUNTAINEER 52 (28'X52') SERIES: MOUNTAINEER PRODUCT DESIGNER: BRIAN K. RIFFEY	STD PLAN "CONDITIONED": 1,369 FT² REV. BY: REV. DATE:

REV #	DATE	DESCRIPTION

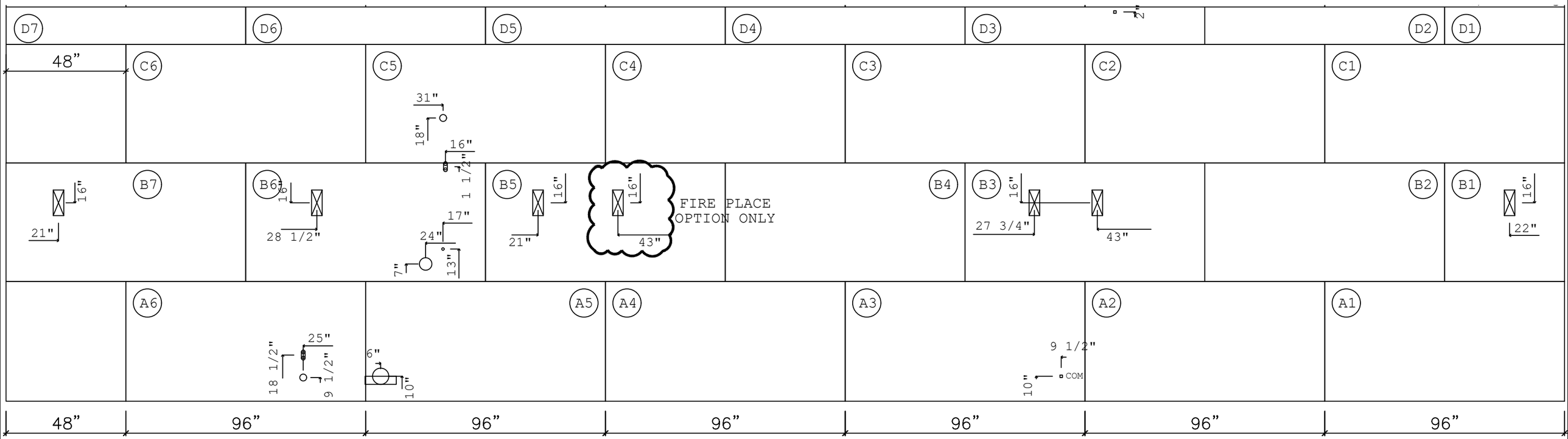

SHEET:						
DECK	FLOOR DECKING A HALF PLAN 2x4	Clayton Clayton - 934 1420 Mountain Rd, Andersonville, TN 37705 PH: 865.494.7800 FAX: 865.494.0243	HILBORN,WERNER,CARTER, AND ASSOCIATES, INC. 1627 SOUTH MYRTLE AVE. CLEARWATER, FL. 33756	DRAWING #: 34M401 MODEL #: MTN28523A DATE: 5/20/2026 SCALE: N.T.S.	MODEL: MOUNTAINEER 52 (28'X52') SERIES: MOUNTAINEER PRODUCT DESIGNER: BRIAN K. RIFFEY	STD PLAN "CONDITIONED": 1,369 FT² REV. BY: REV. DATE:

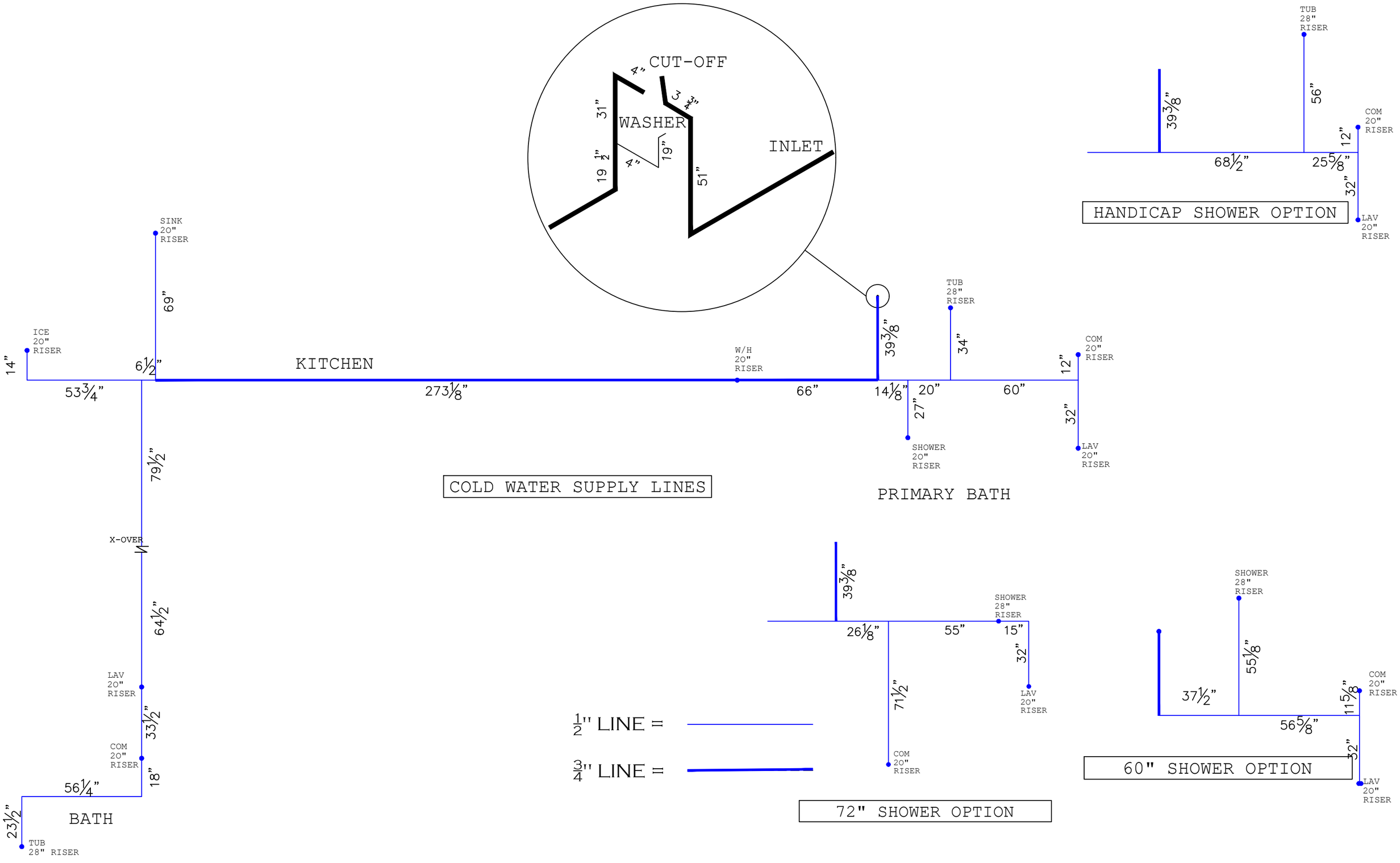

SHEET: CW	2D COLD WATER SUPPLY LINES	Clayton Clayton - 934 1420 Mountain Rd, Andersonville, TN 37705 PH: 865.494.7800 FAX: 865.494.0243	HILBORN,WERNER,CARTER, AND ASSOCIATES, INC. 1627 SOUTH MYRTLE AVE. CLEARWATER, FL. 33756	DRAWING #: 34M401	MODEL: MOUNTAINEER 52 (28'X52')	STD PLAN "CONDITIONED": 1,369 FT²	
				MODEL #: MTN28523A	SERIES: MOUNTAINEER	REV. BY:	
				DATE: 5/20/2026 SCALE: N.T.S.	PRODUCT DESIGNER: BRIAN K. RIFFEY	REV. DATE:	

Type of system: Trunk & Branch

Fixture 2 Fixture 2

Trunk:			
piping:	PEX CTS SDR 9	diameter	3/4"
length (feet)	6.667	ounces/ft: 2.35	volume (oz): 15.66745
Branch:			
piping:	PEX CTS SDR 9	diameter	1/2"
length (feet)	46.083	ounces/ft: 1.18	volume (oz): 54.37794
Twig:			
piping:		diameter	1/2"
length (feet)	0	ounces/ft: 0	volume (oz): 0
total			
length (feet)	52.75		volume (oz): 70.04539

Fixture	Length (ft)	Volume (oz)	Volume (gal)
Fixture 1	52.75	70.04539	0.55

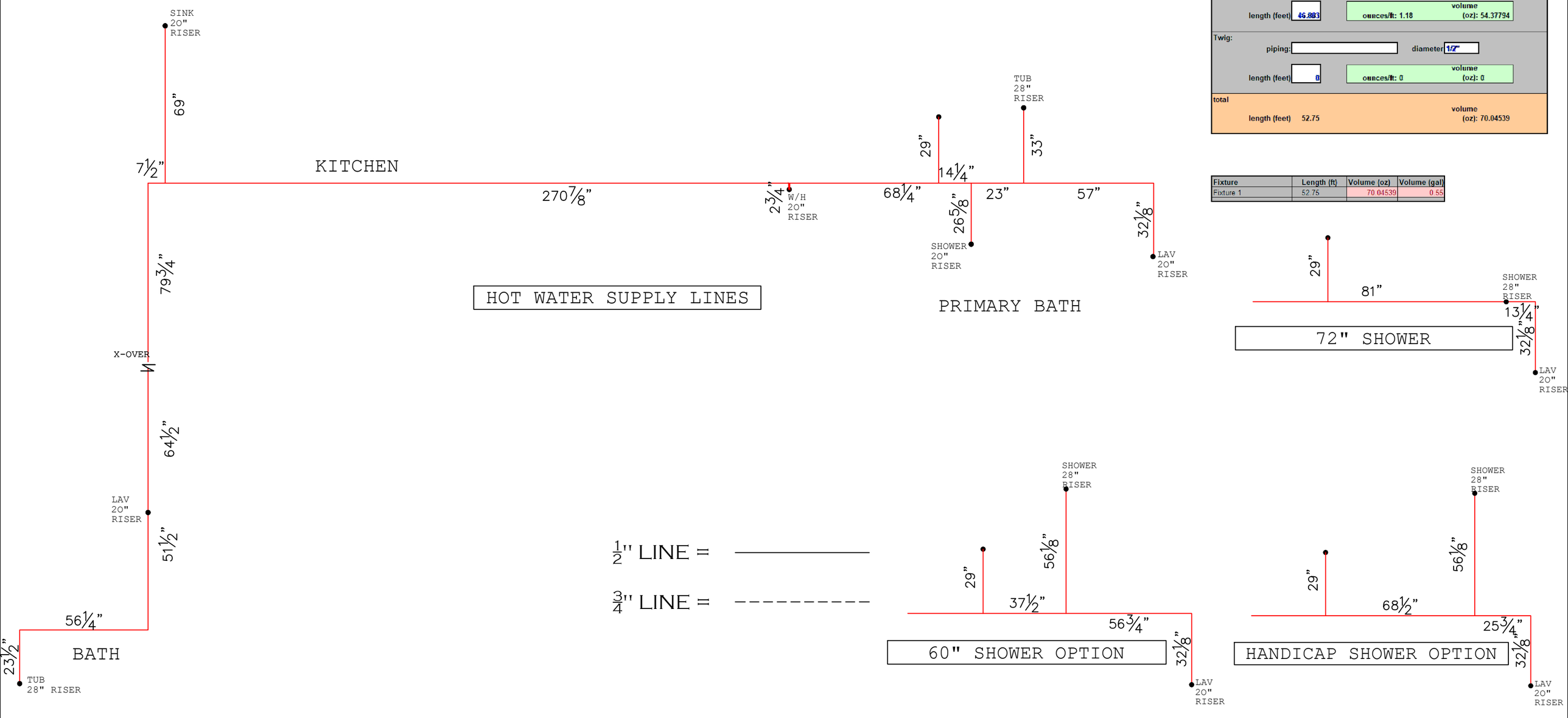

SHEET: HW	2D HOT WATER SUPPLY LINES	Clayton - 934 1420 Mountain Rd, Andersonville, TN 37705 PH: 865.494.7800 FAX: 865.494.0243	HILBORN,WERNER,CARTER, AND ASSOCIATES, INC. 1627 SOUTH MYRTLE AVE. CLEARWATER, FL. 33756	DRAWING #: 34M401 MODEL #: MTN28523A DATE: 5/20/2026 SCALE: N.T.S.	MODEL: MOUNTAINEER 52 (28'X52') SERIES: MOUNTAINEER PRODUCT DESIGNER: BRIAN K. RIFFEY	STD PLAN "CONDITIONED": 1,369 FT² REV. BY: REV. DATE:

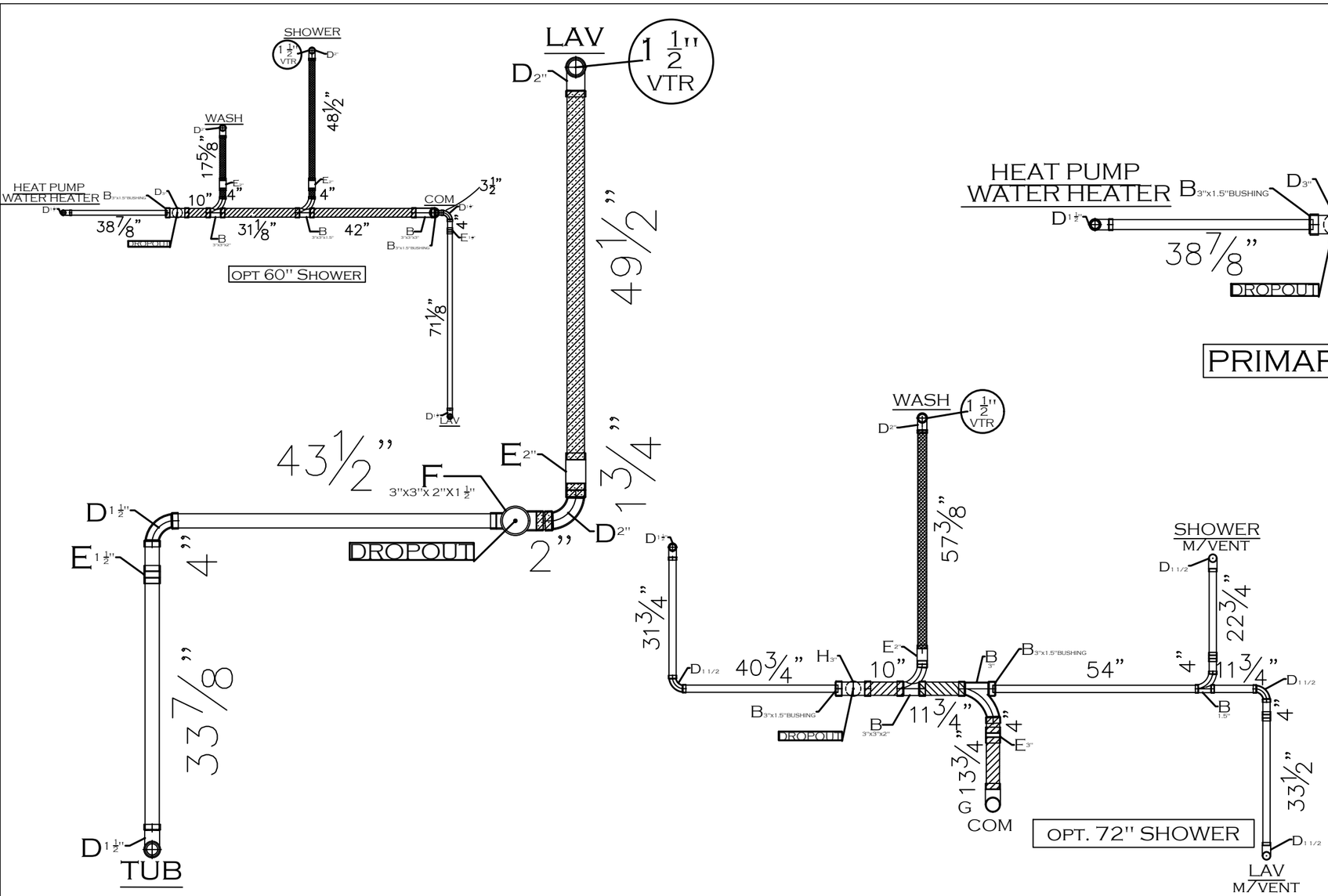

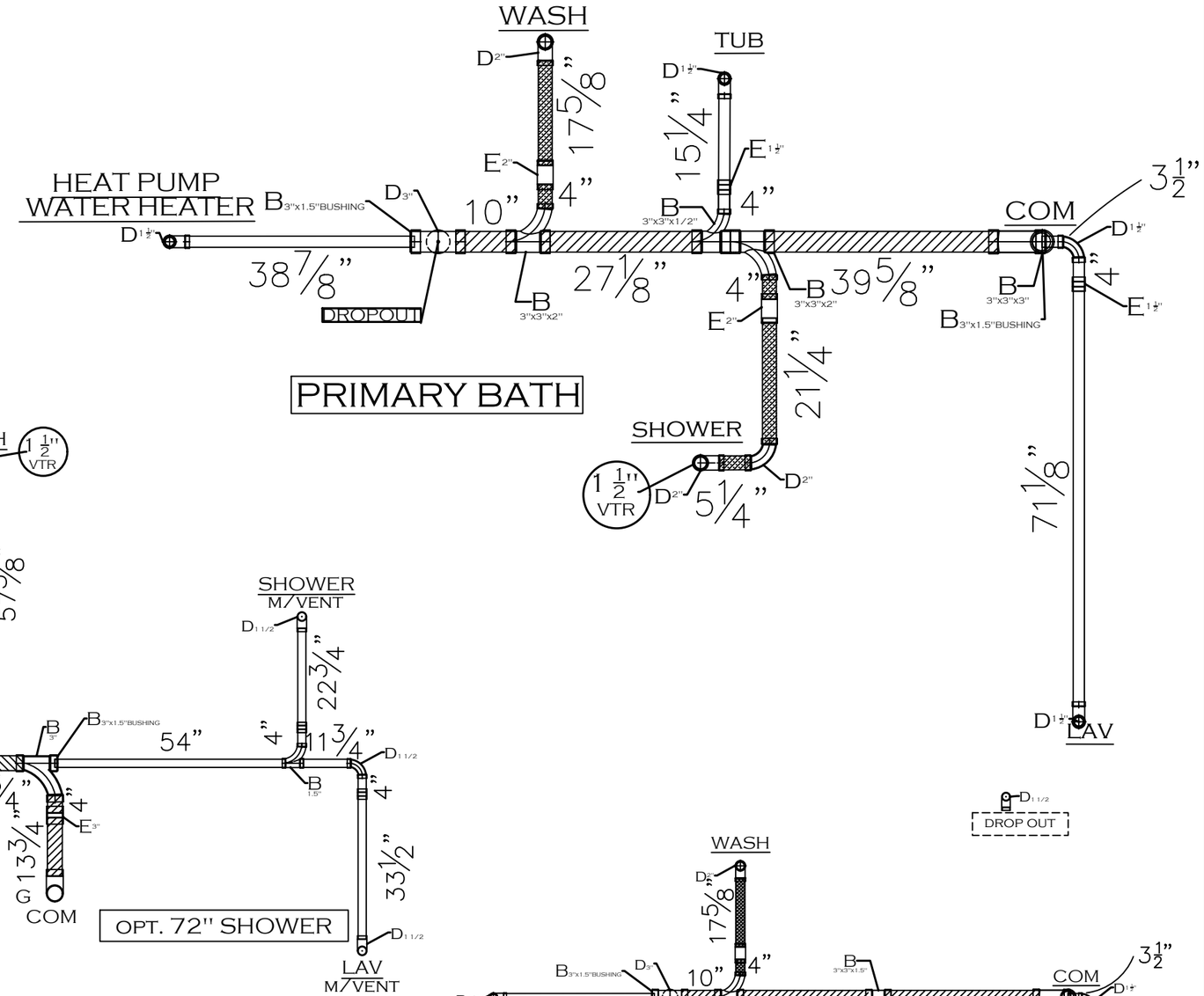

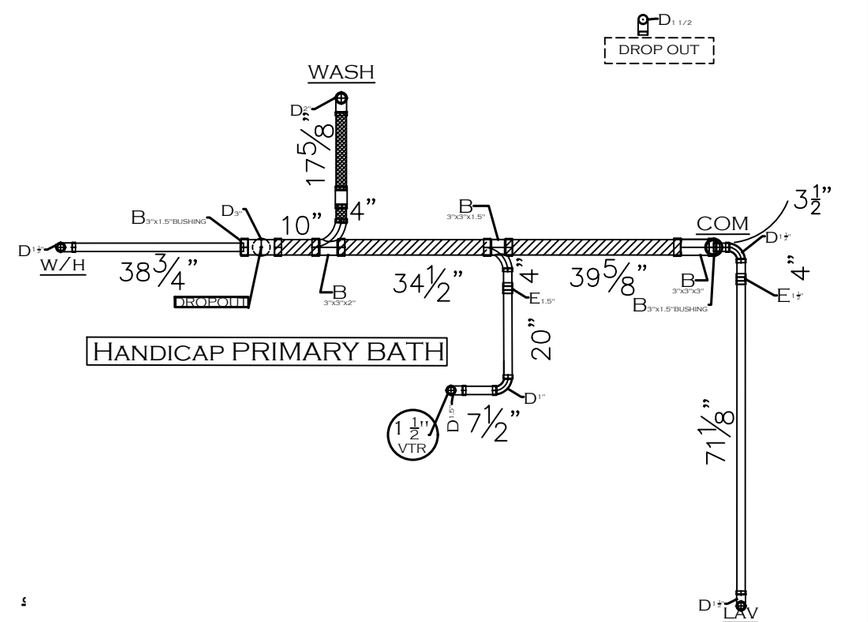

D.W.V. LINE SIZE CHART

	= 3"
	= 2"
	= 1 1/2"

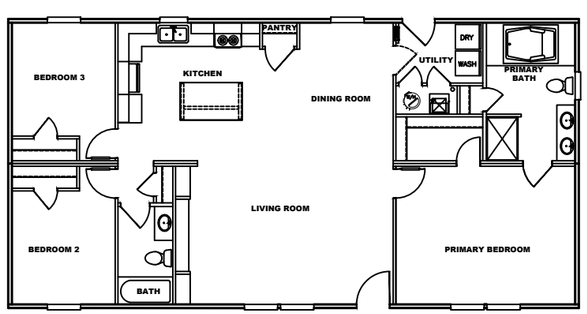

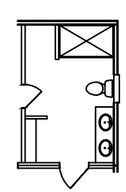

OPT. 60" SHOWER PRIMARY BATH

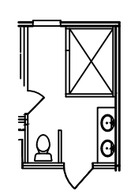

PRIMARY BATH 72" SHOWER OPTION

SHEET: DRAIN	2D DRAIN LINES 2X6	Clayton Clayton - 934 1420 Mountain Rd, Andersonville, TN 37705 PH: 865.494.7800 FAX: 865.494.0243	HILBORN,WERNER,CARTER, AND ASSOCIATES, INC. 1627 SOUTH MYRTLE AVE. CLEARWATER, FL. 33756	DRAWING #: 34M401		MODEL: MOUNTAINEER 52 (28'X52')	STD PLAN "CONDITIONED": 1,369 FT²
				MODEL #: MTN28523A		SERIES: MOUNTAINEER	REV. BY:
				DATE: 5/20/2026	SCALE: N.T.S.	PRODUCT DESIGNER: BRIAN K. RIFFEY	REV. DATE:

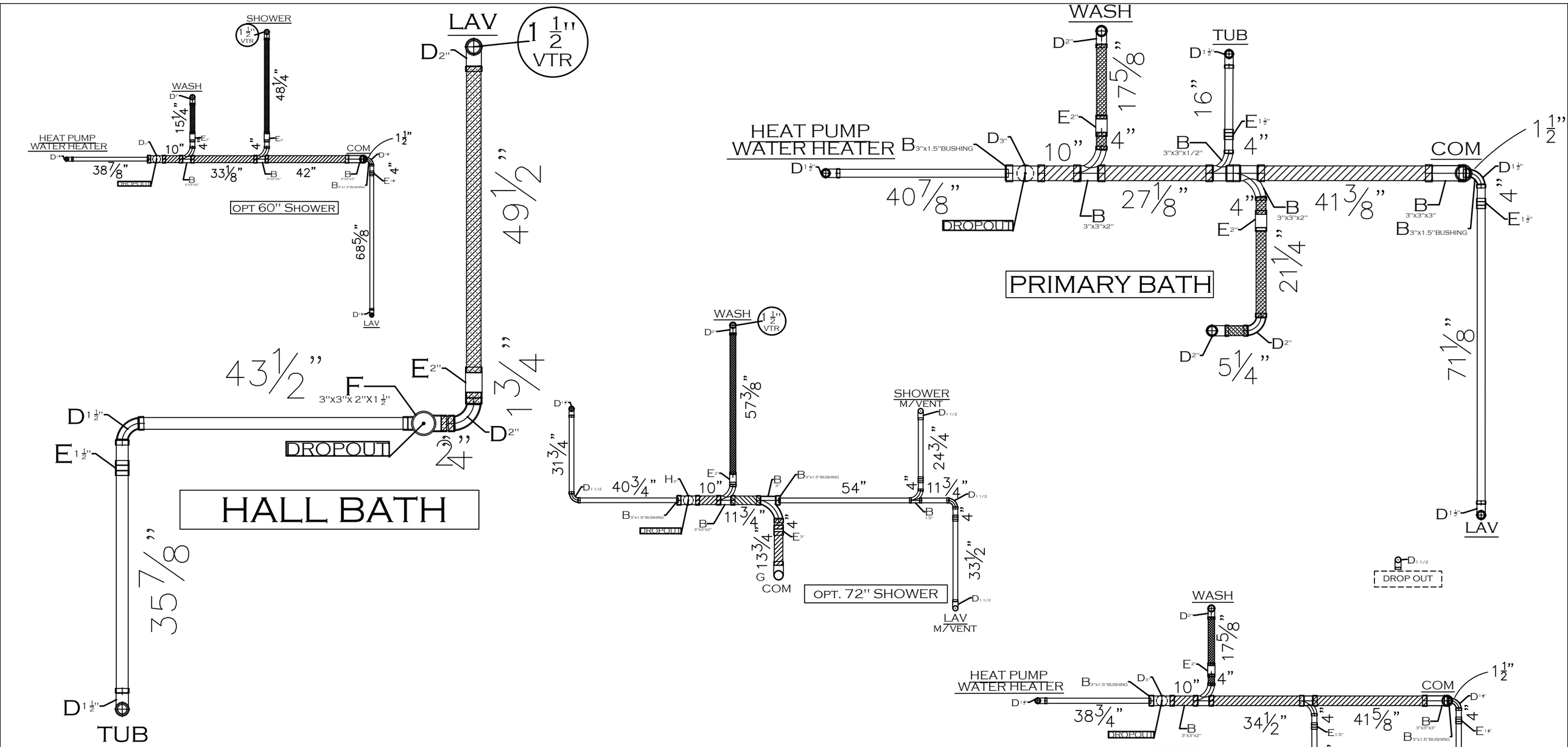

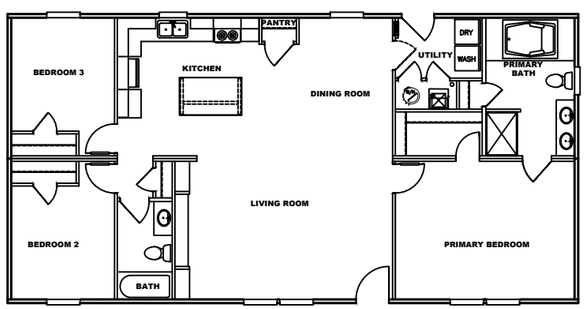

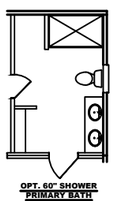

D.W.V. LINE SIZE CHART

	= 3"
	= 2"
	= 1 1/2"

SHEET: DRAIN	2D DRAIN LINES 2X4	Clayton - 934 1420 Mountain Rd, Andersonville, TN 37705 PH: 865.494.7800 FAX: 865.494.0243	HILBORN, WERNER, CARTER, AND ASSOCIATES, INC. 1627 SOUTH MYRTLE AVE. CLEARWATER, FL. 33756	DRAWING #: 34M401 MODEL #: MTN28523A DATE: 5/20/2026 SCALE: N.T.S.	MODEL: MOUNTAINEER 52 (28'X52') SERIES: MOUNTAINEER PRODUCT DESIGNER: BRIAN K. RIFFEY	STD PLAN "CONDITIONED": 1,369 FT² REV. BY: REV. DATE:

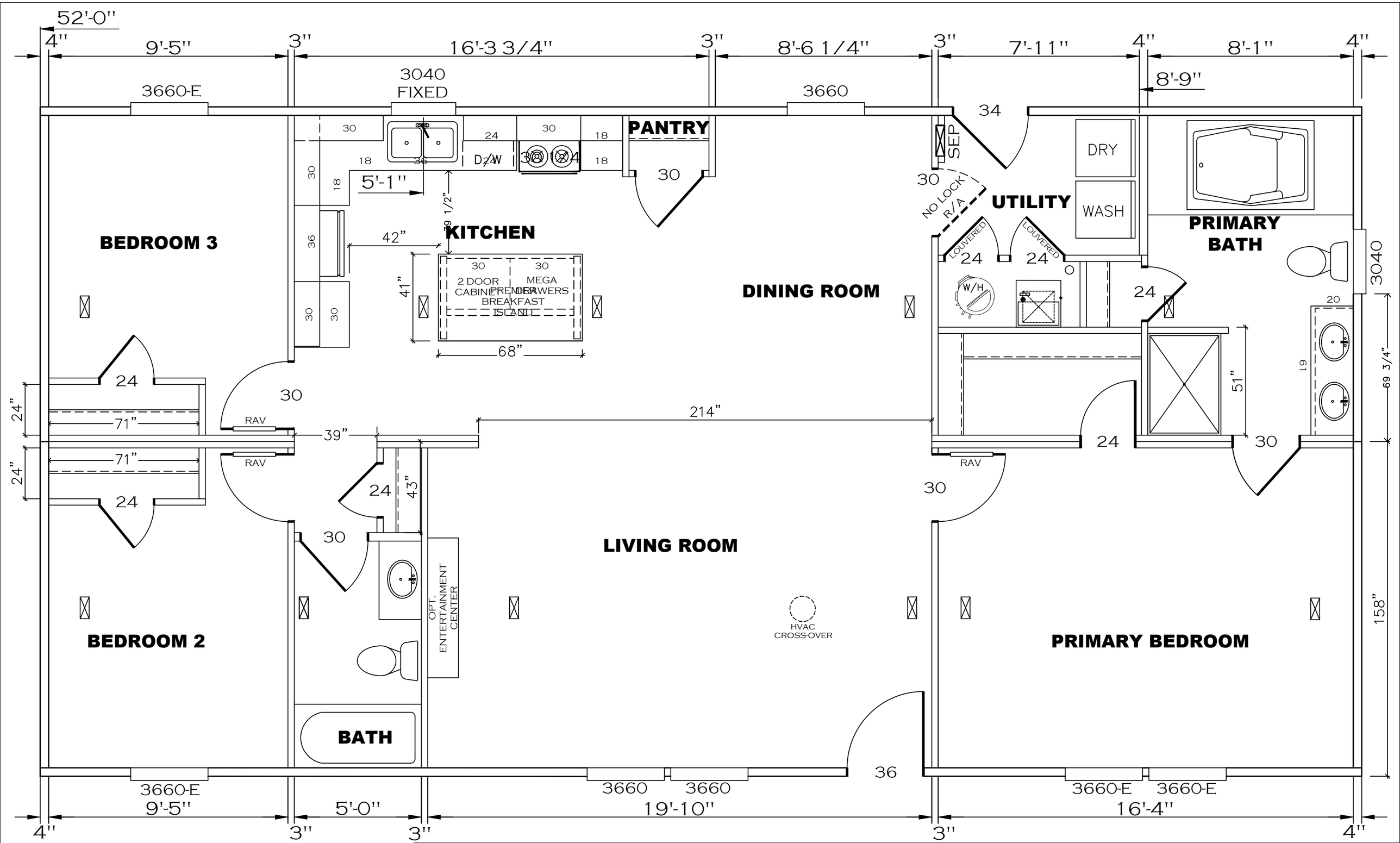

SHEET: SHOP	CONSTRUCTION FLOOR PLAN	Clayton Clayton - 934 1420 Mountain Rd, Andersonville, TN 37705 PH: 865.494.7800 FAX: 865.494.0243	HILBORN,WERNER,CARTER, AND ASSOCIATES, INC. 1627 SOUTH MYRTLE AVE. CLEARWATER, FL. 33756	DRAWING #: 34M401 MODEL #: MTN28523A DATE: 4/2/2026 SCALE: N.T.S.	MODEL: MOUNTAINEER 52 (28'X52') SERIES: MOUNTAINEER PRODUCT DESIGNER: BRIAN K. RIFFEY	STD PLAN "CONDITIONED": 1,369 FT² REV. BY: REV. DATE:

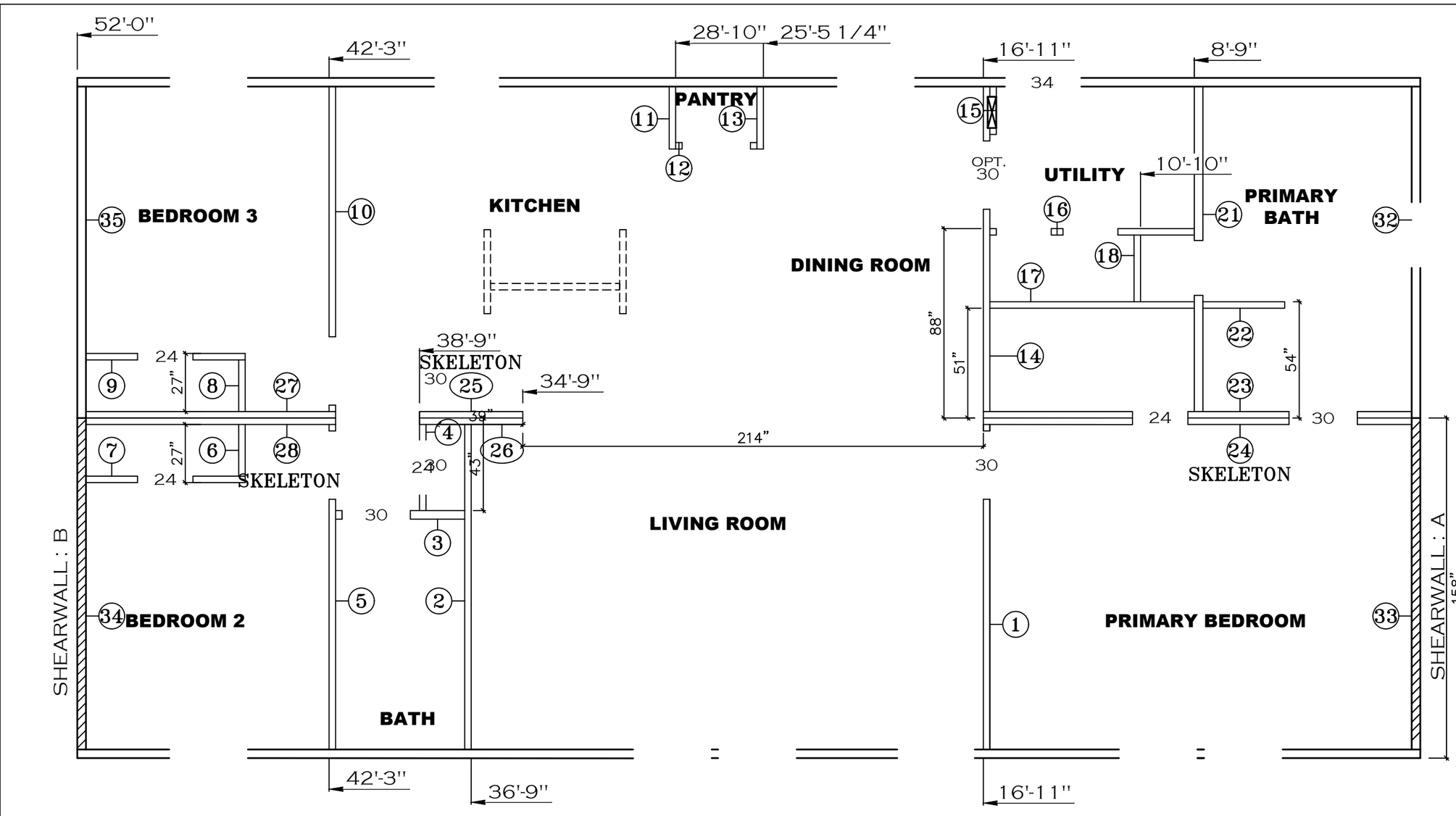

SHEET:						
BASE	WALL SET PLAN	Clayton - 934 1420 Mountain Rd, Andersonville, TN 37705 PH: 865.494.7800 FAX: 865.494.0243	HILBORN,WERNER,CARTER, AND ASSOCIATES, INC. 1627 SOUTH MYRTLE AVE. CLEARWATER, FL. 33756	DRAWING #: 34M401 MODEL #: MTN28523A DATE: 5/20/2026 SCALE: N.T.S.	MODEL: MOUNTAINEER 52 (28'X52') SERIES: MOUNTAINEER PRODUCT DESIGNER: BRIAN K. RIFFEY	STD PLAN "CONDITIONED": 1,369 FT² REV. BY: REV. DATE:

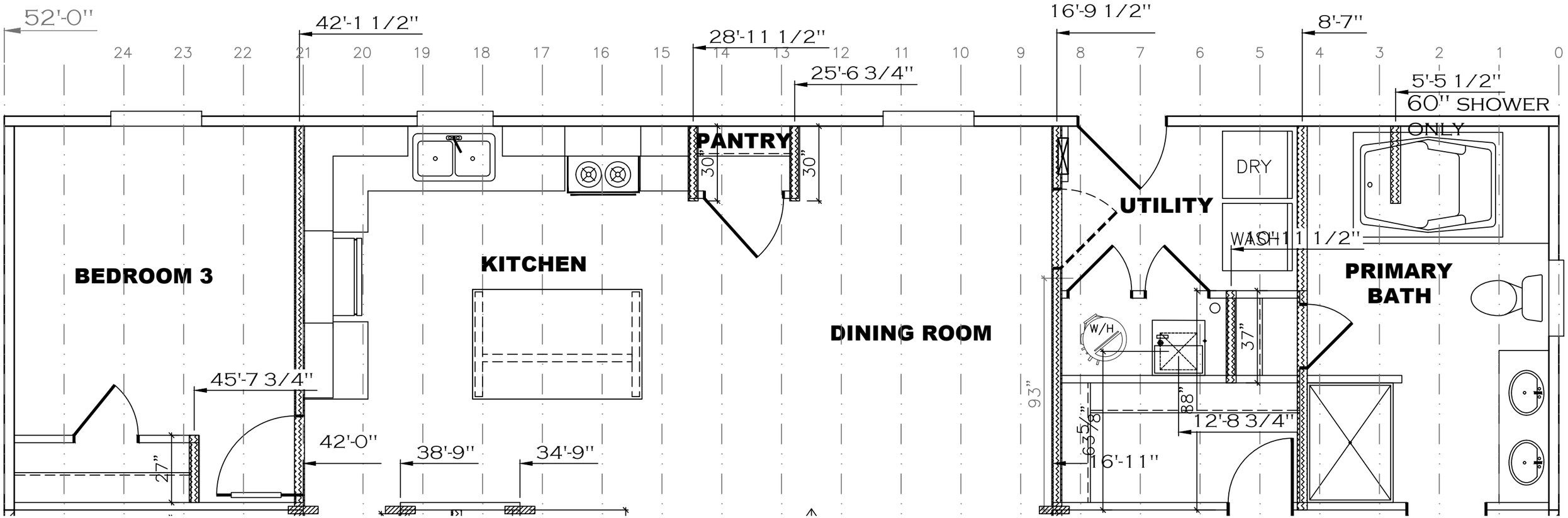

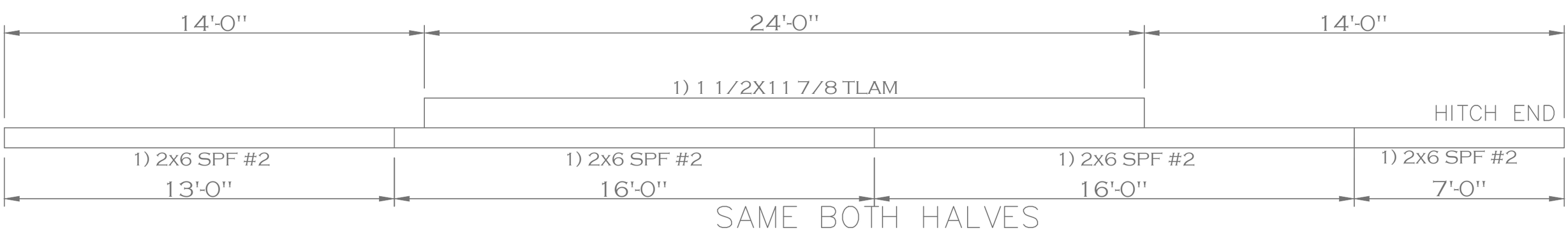

SHEET: CJIG	RIDGEBEAM – RAFTER PLAN A HALF	Clayton Clayton - 934 1420 Mountain Rd, Andersonville, TN 37705 PH: 865.494.7800 FAX: 865.494.0243	HILBORN,WERNER,CARTER, AND ASSOCIATES, INC. 1627 SOUTH MYRTLE AVE. CLEARWATER, FL. 33756	DRAWING #: 34M401 MODEL #: MTN28523A DATE: 5/20/2026 SCALE: N.T.S.	MODEL: MOUNTAINEER 52 (28'X52') SERIES: MOUNTAINEER PRODUCT DESIGNER: BRIAN K. RIFFEY	STD PLAN "CONDITIONED": 1,369 FT² REV. BY: REV. DATE:	

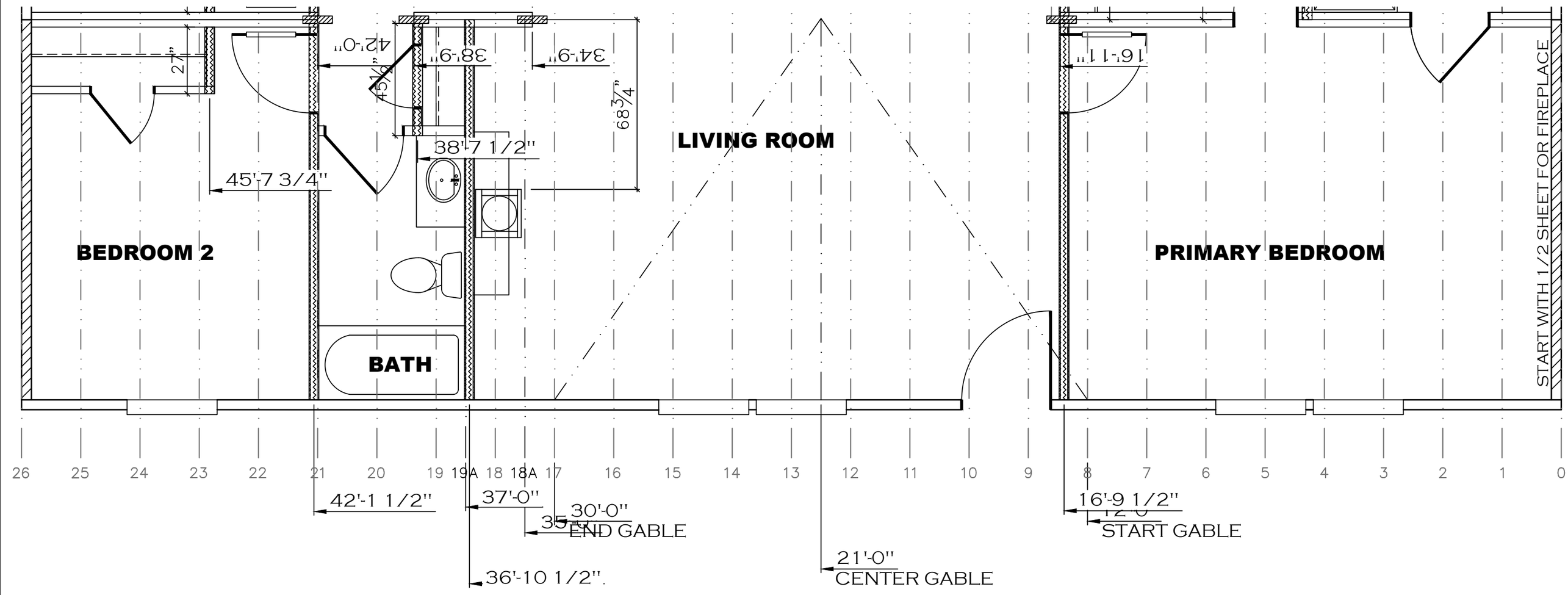

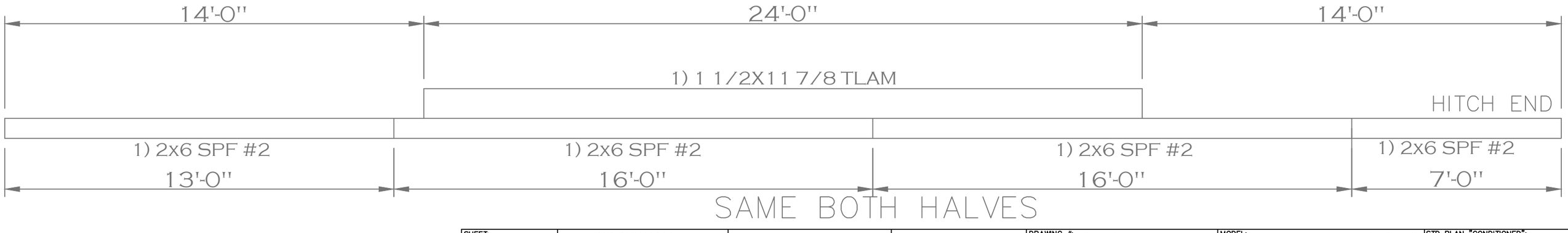

SHEET: CJIG	RIDGEBEAM – RAFTER PLAN B HALF	Clayton Clayton - 934 1420 Mountain Rd, Andersonville, TN 37705 PH: 865.494.7800 FAX: 865.494.0243	HILBORN,WERNER,CARTER, AND ASSOCIATES, INC. 1627 SOUTH MYRTLE AVE. CLEARWATER, FL. 33756	DRAWING #: 34M401		MODEL: MOUNTAINEER 52 (28'X52')	STD PLAN "CONDITIONED": 1,369 FT²
				MODEL #: MTN28523A		SERIES: MOUNTAINEER	REV. BY:
				DATE: 5/20/2026	SCALE: N.T.S.	PRODUCT DESIGNER: BRIAN K. RIFFEY	REV. DATE:

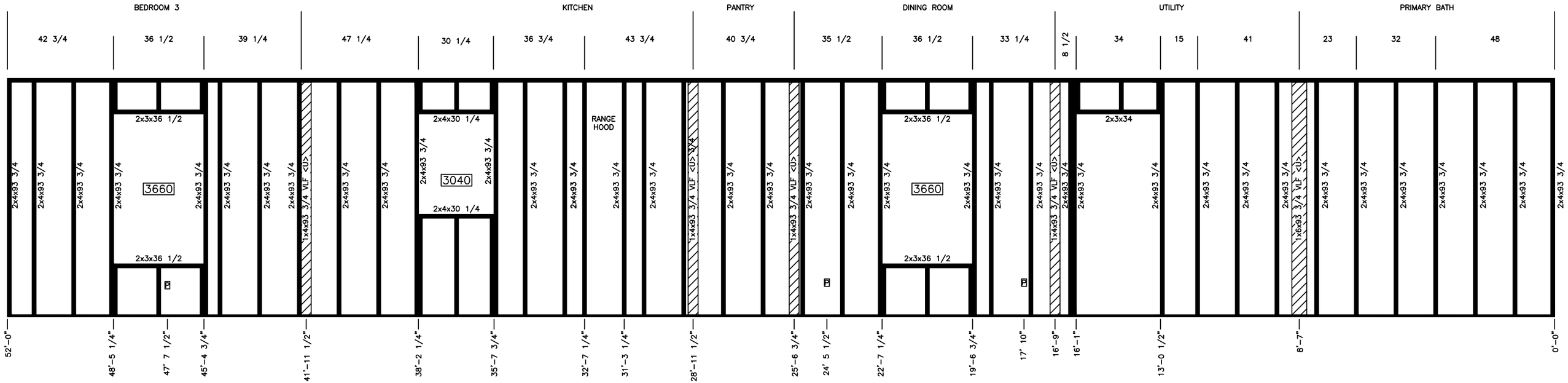

B—HALF

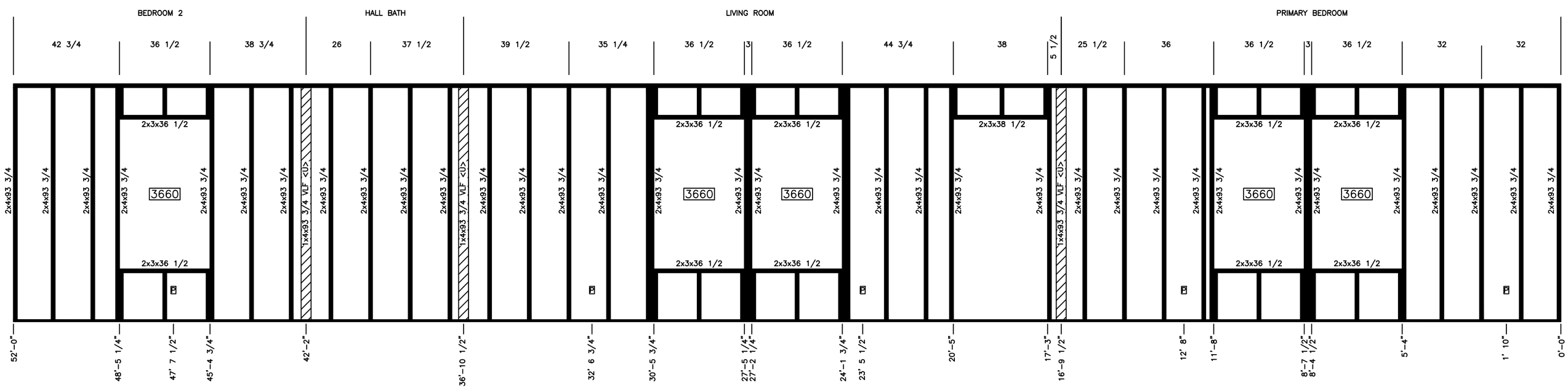

A—HALF

SHEET: BASE	WALL SET PLAN	Clayton Clayton - 934 1420 Mountain Rd, Andersonville, TN 37705 PH: 865.494.7800 FAX: 865.494.0243	HILBORN, WERNER, CARTER, AND ASSOCIATES, INC. 1627 SOUTH MYRTLE AVE. CLEARWATER, FL. 33756	DRAWING #: 34M401 MODEL #: MTN28523A DATE: 5/20/2026 SCALE: N.T.S.	MODEL: MOUNTAINEER 52 (28'X52') SERIES: MOUNTAINEER PRODUCT DESIGNER: BRIAN K. RIFFEY	STD PLAN "CONDITIONED": 1,369 FT² REV. BY: REV. DATE:

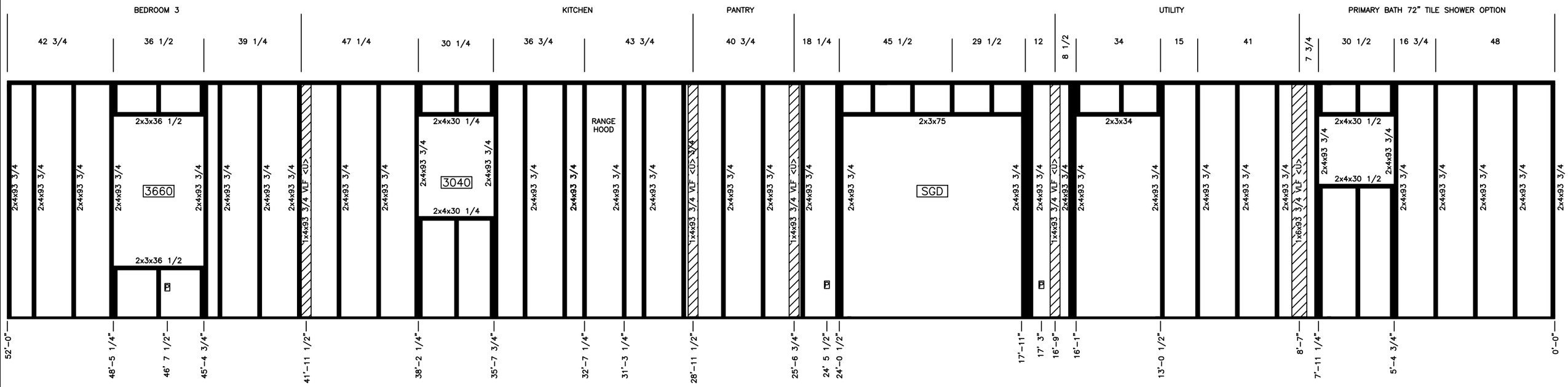

B—HALF

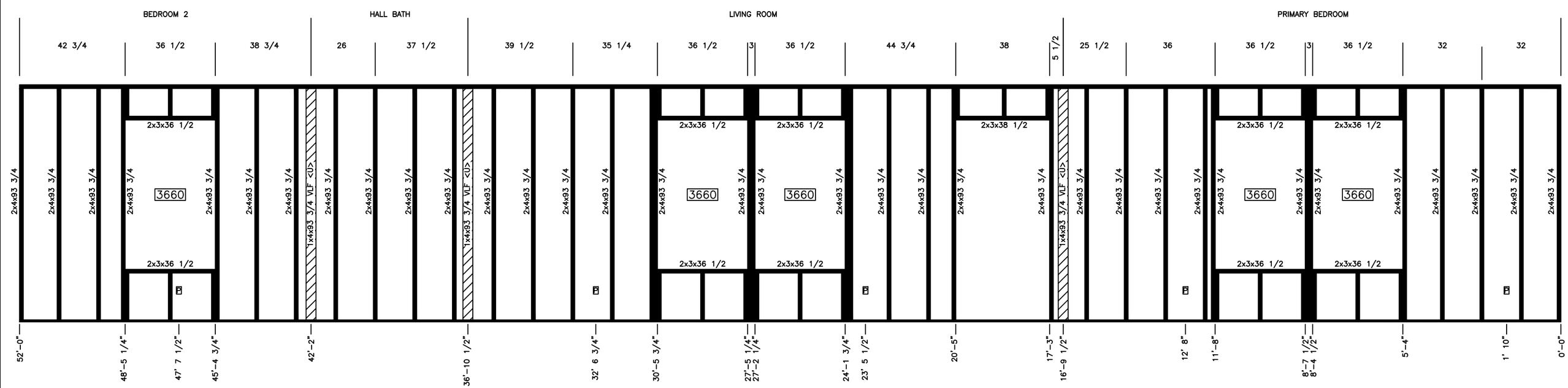

A—HALF

SHEET: BASE	WALL SET PLAN	Clayton Clayton - 934 1420 Mountain Rd, Andersonville, TN 37705 PH: 865.494.7800 FAX: 865.494.0243	HILBORN, WERNER, CARTER, AND ASSOCIATES, INC. 1627 SOUTH MYRTLE AVE. CLEARWATER, FL. 33756	DRAWING #: 34M401 MODEL #: MTN28523A DATE: 5/20/2026 SCALE: N.T.S.	MODEL: MOUNTAINEER 52 (28'X52') SERIES: MOUNTAINEER PRODUCT DESIGNER: BRIAN K. RIFFEY	STD PLAN "CONDITIONED": 1,369 FT² REV. BY: REV. DATE:

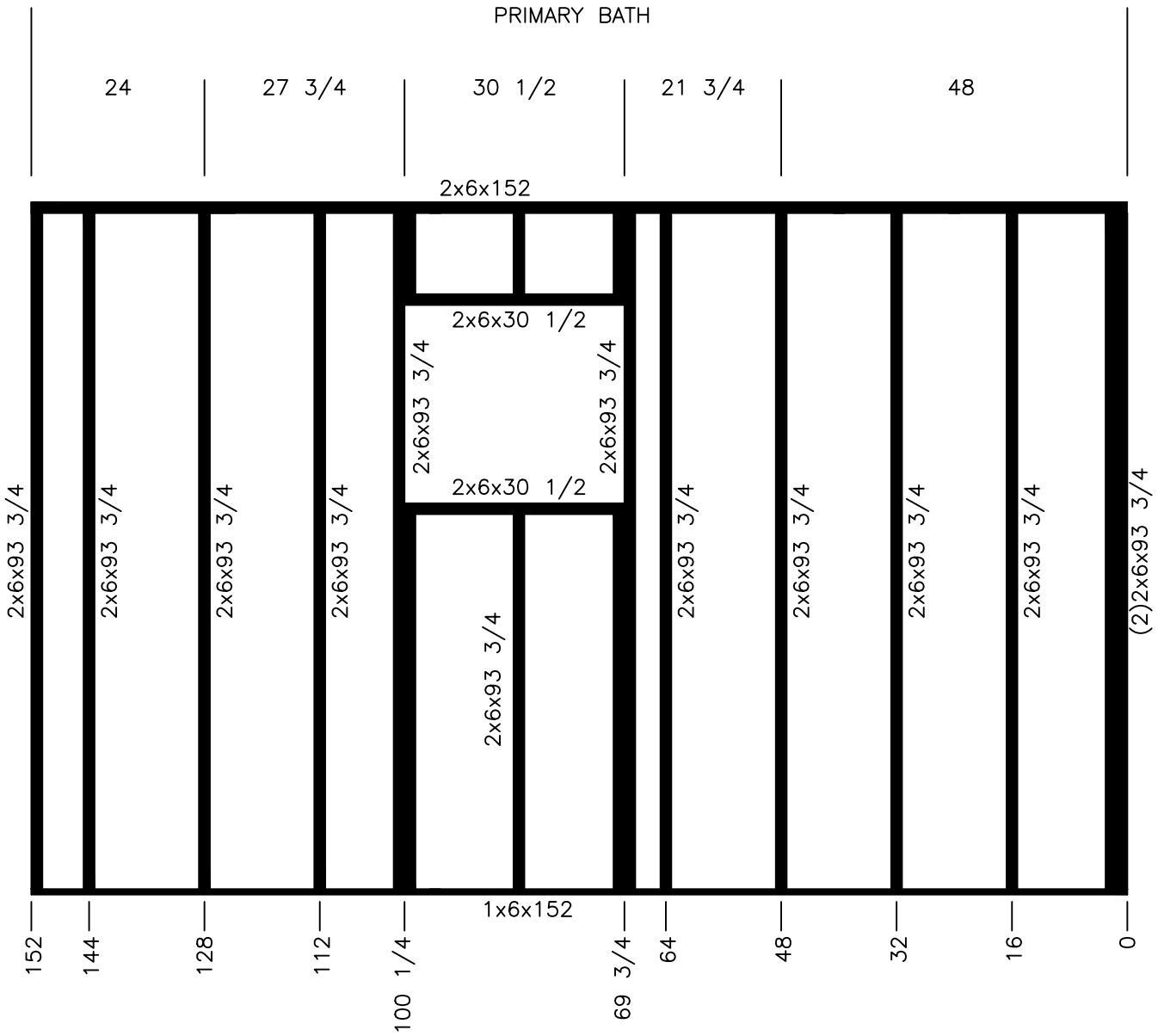

CUTLIST		
QTY	SIZE	TYPE
1	152	1x4
1	152	2x4
12	93 3/4	2x4
2	30 1/2	2x4
3	11 1/4	2x4
3	52	2x4

STUD SPACING 16"

Clayton HOMES

Model #: MTN28523A

Date: 05/11/2026

Scale:

Drawing #: 34M401

Product Designer: B.R.K.

Model: 28' x 52' Mountaineer

WALL 32

Rev:

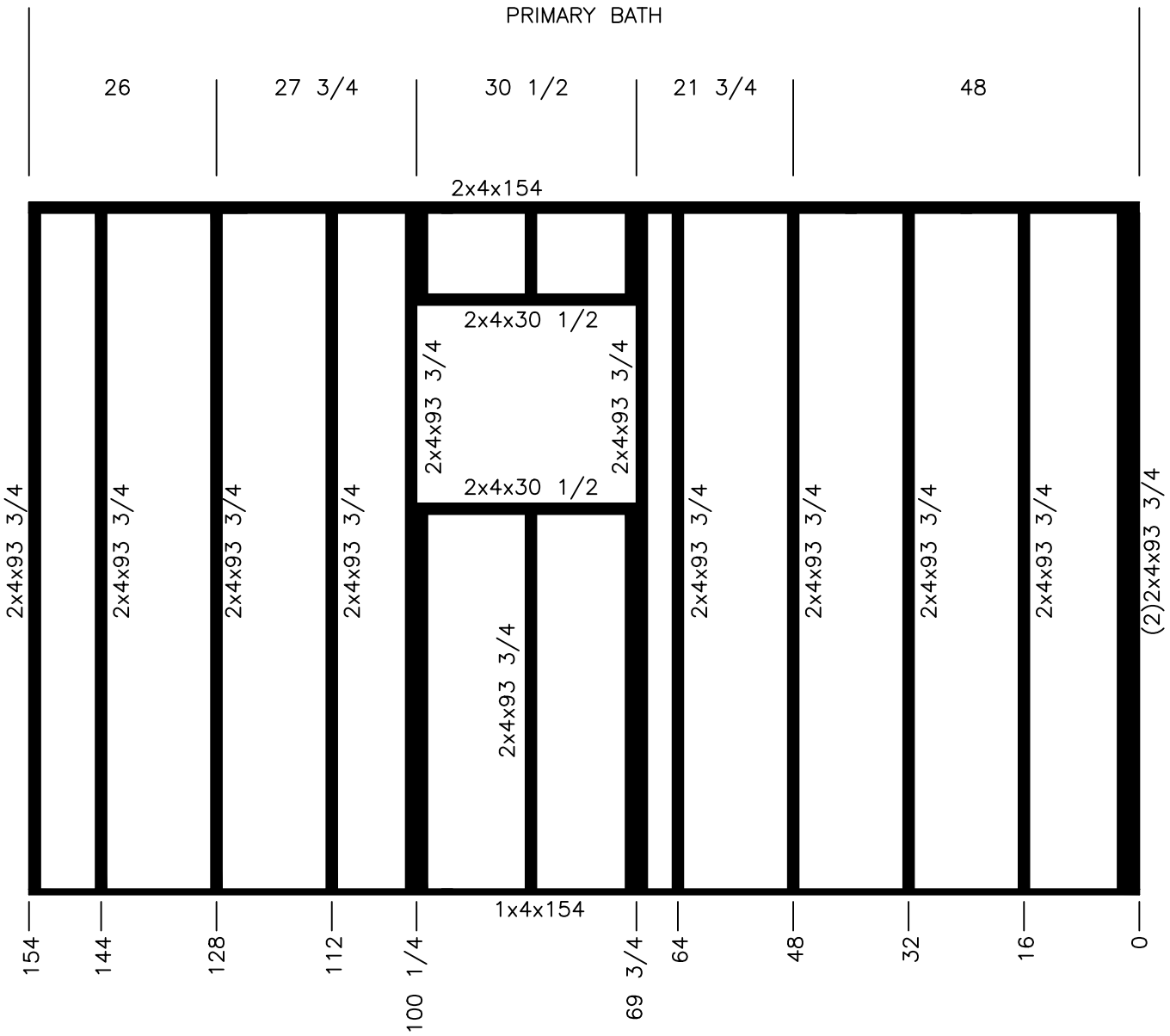

CUTLIST

QTY	SIZE	TYPE
1	154	1x4
1	154	2x4
12	93 3/4	2x4
2	30 1/2	2x4
3	11 1/4	2x4
3	52	2x4

STUD SPACING 16"

Clayton HOMES

Model #: MTN28523A

Date: 05/11/2026

Scale:

Drawing #: 34M401

Product Designer: B.R.K.

Model: 28' x 52' Mountaineer

WALL 32

Rev:

72" TILE SHOWER OPTION ONLY
PRIMARY BATH

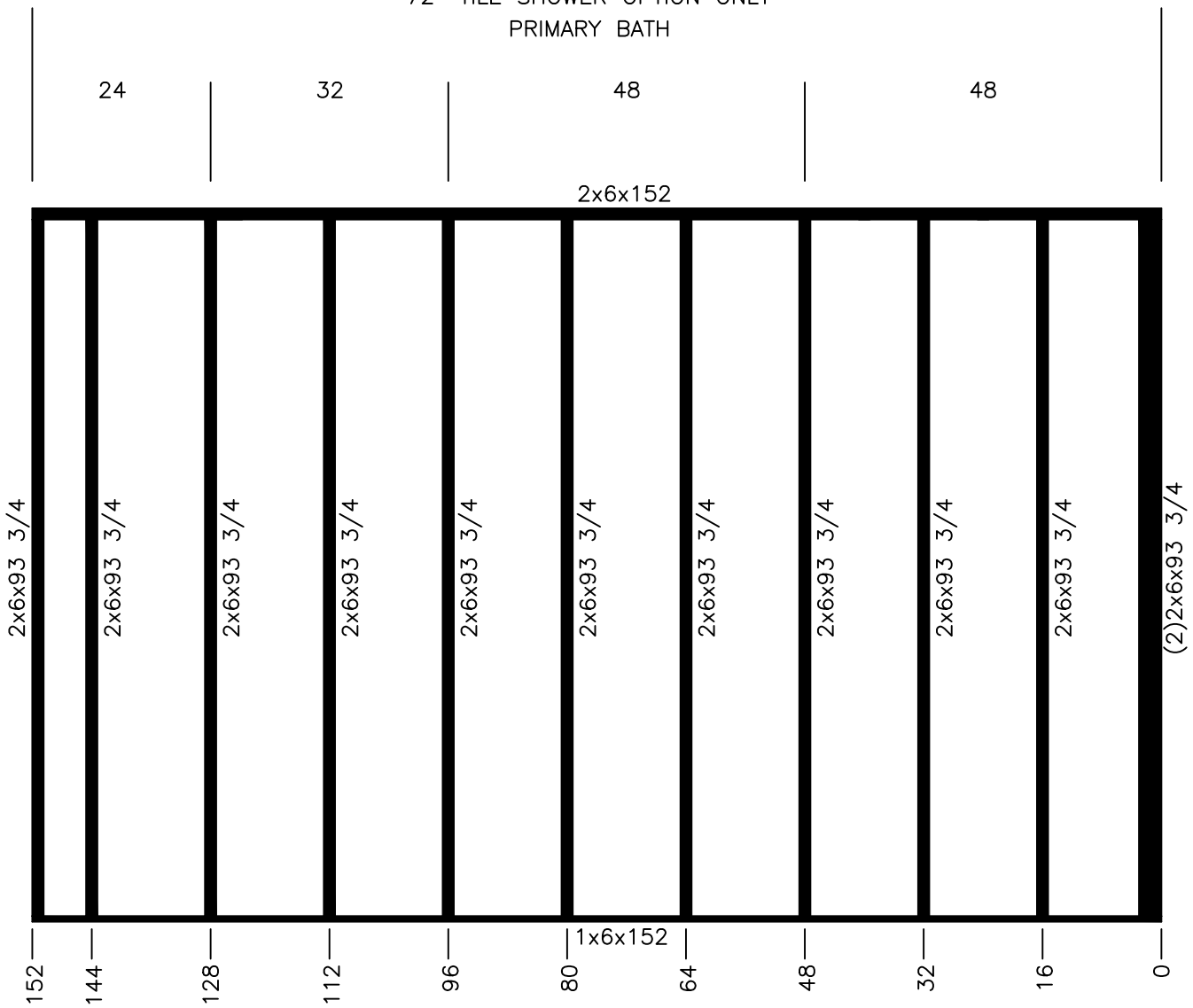

CUTLIST		
QTY	SIZE	TYPE
1	152	1x6
1	152	2x6
12	93 3/4	2x6

STUD SPACING 16"

Clayton HOMES

Model #: MTN28523A

Date: 05/11/2026

Scale:

Drawing #: 34M401

Product Designer: B.R.K.

Model: 28' x 52' Mountaineer

WALL 32A

Rev:

72" TILE SHOWER OPTION ONLY
PRIMARY BATH

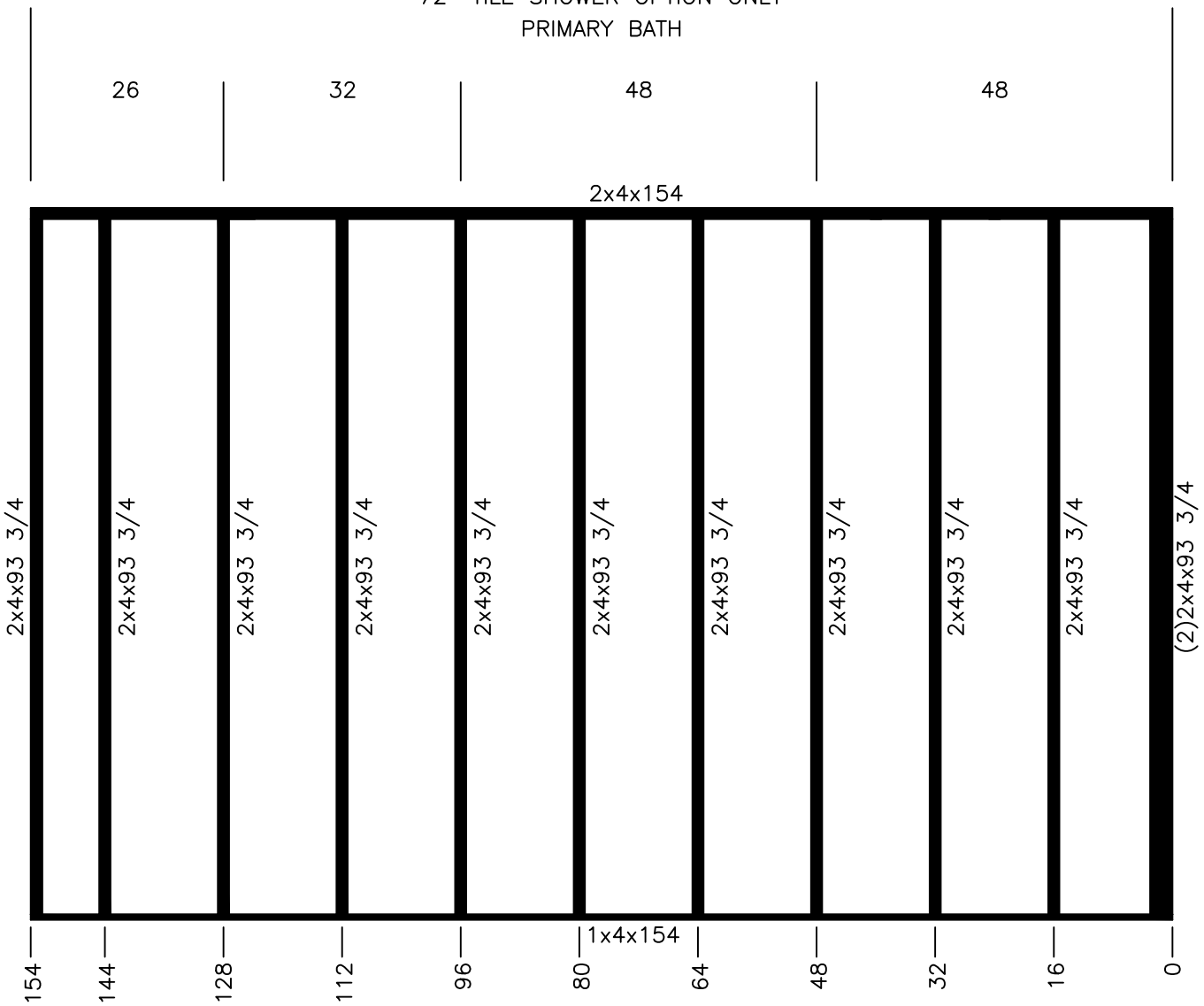

CUTLIST		
QTY	SIZE	TYPE
1	154	1x4
1	154	2x4
12	93 3/4	2x4

STUD SPACING 16"

Clayton HOMES	Model #: MTN28523A	Drawing #: 34M401
	Date: 05/11/2026 Scale:	
Product Designer: B.R.K.	Model: 28' x 52' Mountaineer	
WALL 32A		Rev:

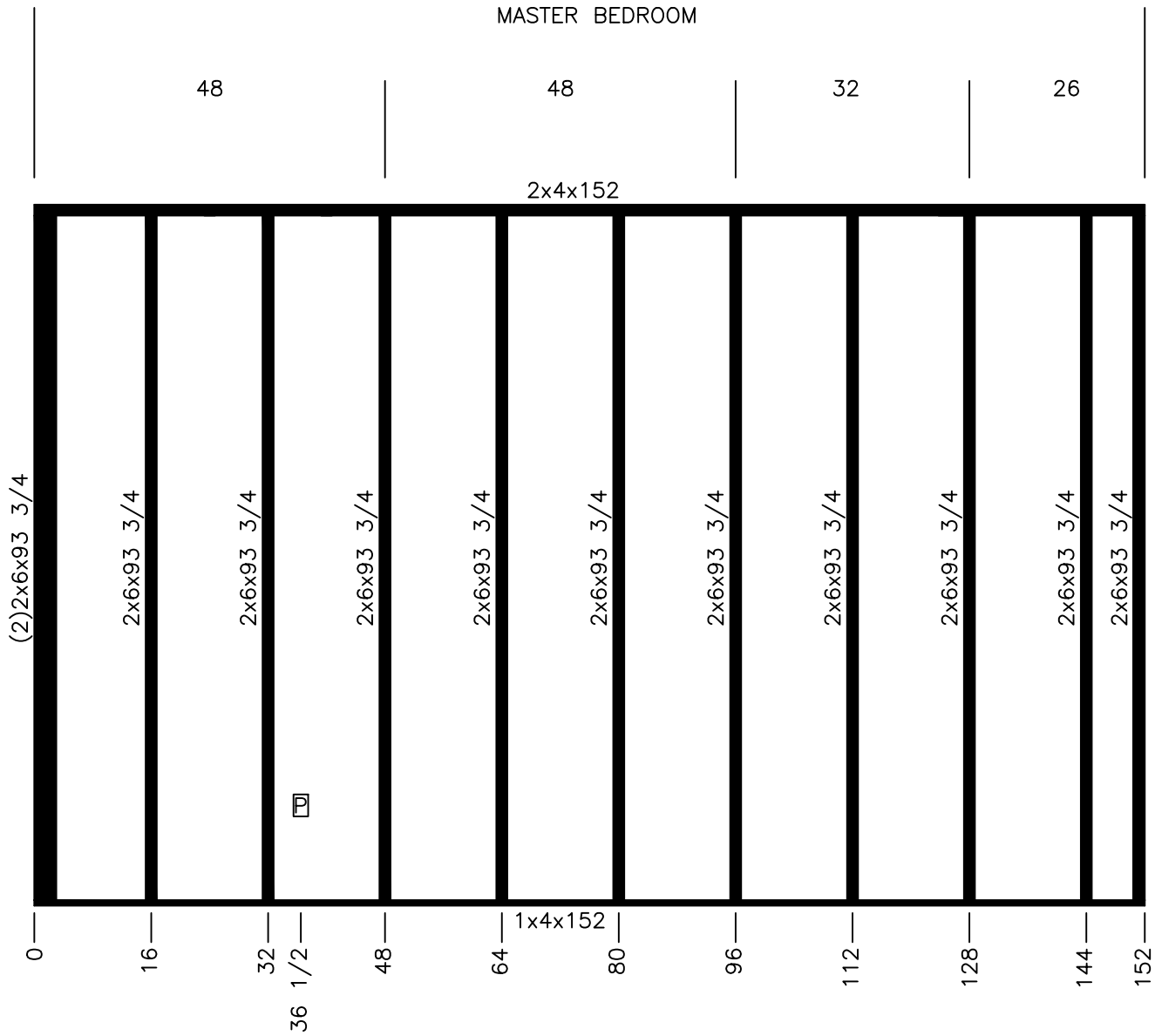

CUTLIST		
QTY	SIZE	TYPE
1	152	1x6
1	152	2x6
12	93 3/4	2x6

STUD SPACING 16"

Clayton HOMES	Model #: MTN28523A		Drawing #: 34M401
	Date: 05/11/2026	Scale: N.T.S.	
Product Designer: B.R.K.	Model: 28' x 52' Mountaineer		
WALL 33			Rev:

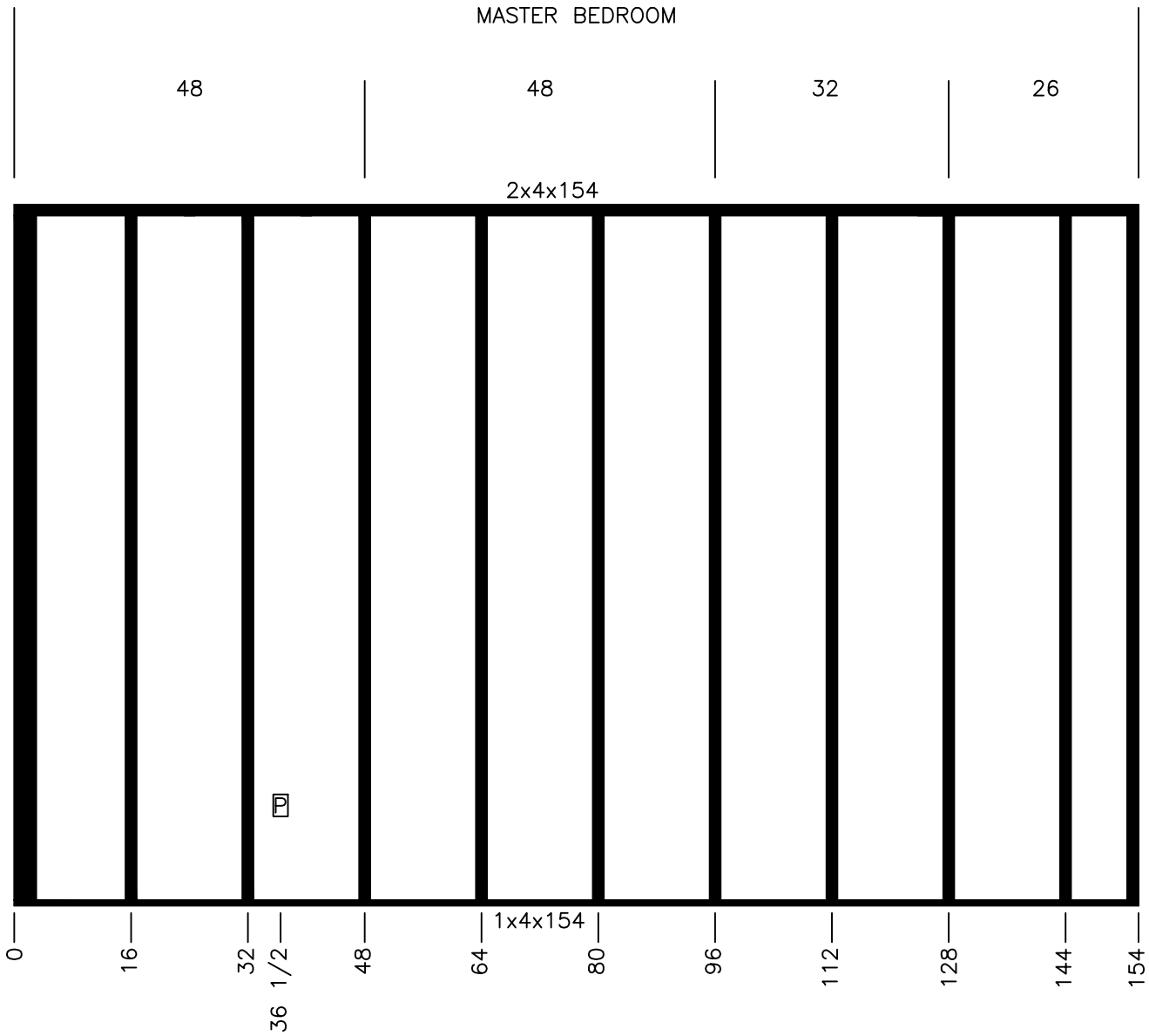

CUTLIST		
QTY	SIZE	TYPE
1	154	1x3
1	154	2x3
12	93 3/4	2x3

STUD SPACING 16"

Clayton HOMES	Model #: MTN28523A		Drawing #: 34M401
	Date: 05/11/2026	Scale: N.T.S.	
Product Designer: B.R.K.	Model: 28' x 52' Mountaineer		
WALL 33			Rev:

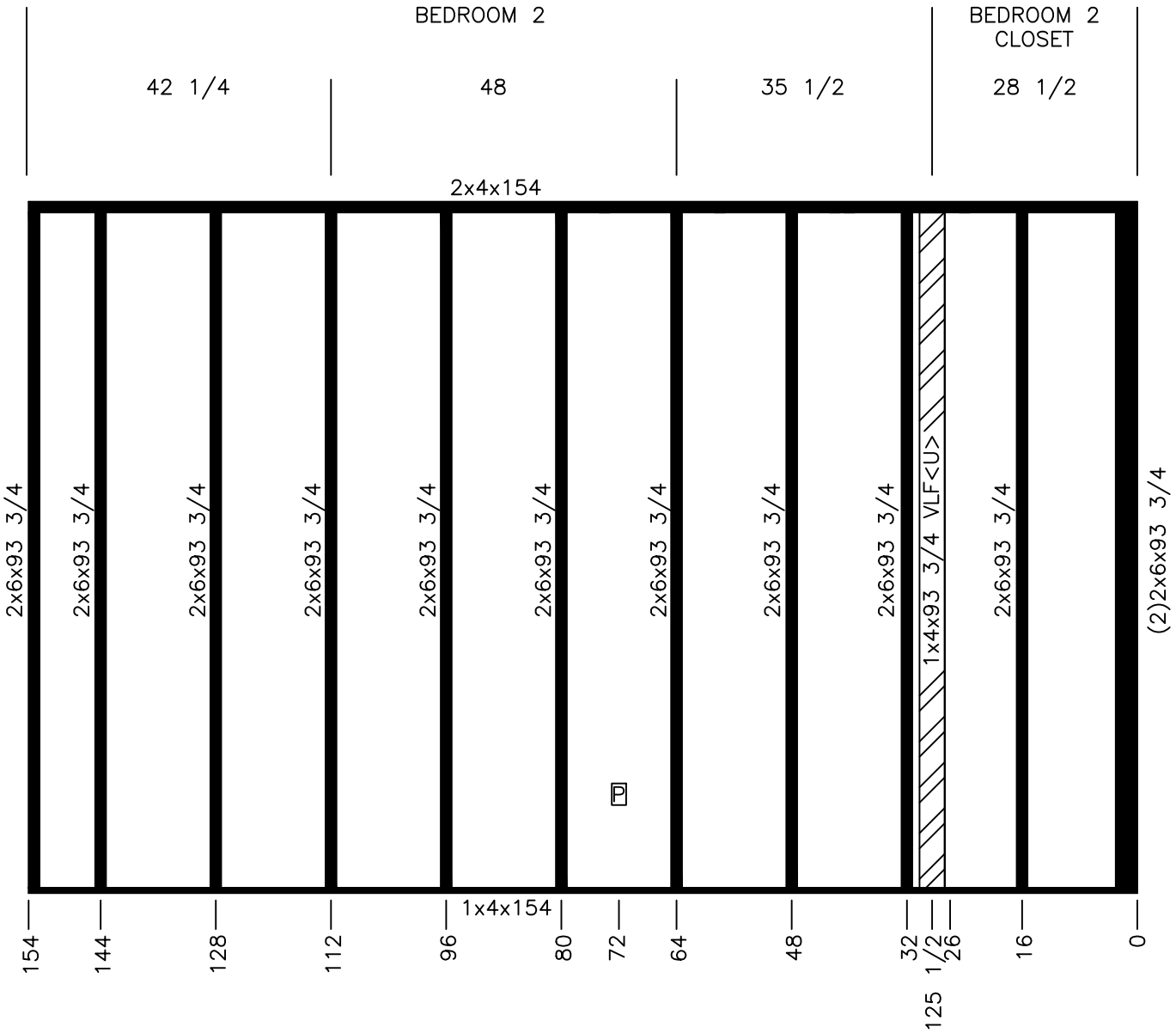

CUTLIST		
QTY	SIZE	TYPE
1	154	1x6
1	154	2x6
12	93 3/4	2x6
1	93 3/4 VLF<U>	1x4

STUD SPACING 16"

Clayton HOMES	Model #: MTN28523A		Drawing #: 34M401
	Date: 05/11/2026	Scale: N.T.S.	
Product Designer: B.R.K.	Model: 28' x 52' Mountaineer		
WALL 34			Rev:

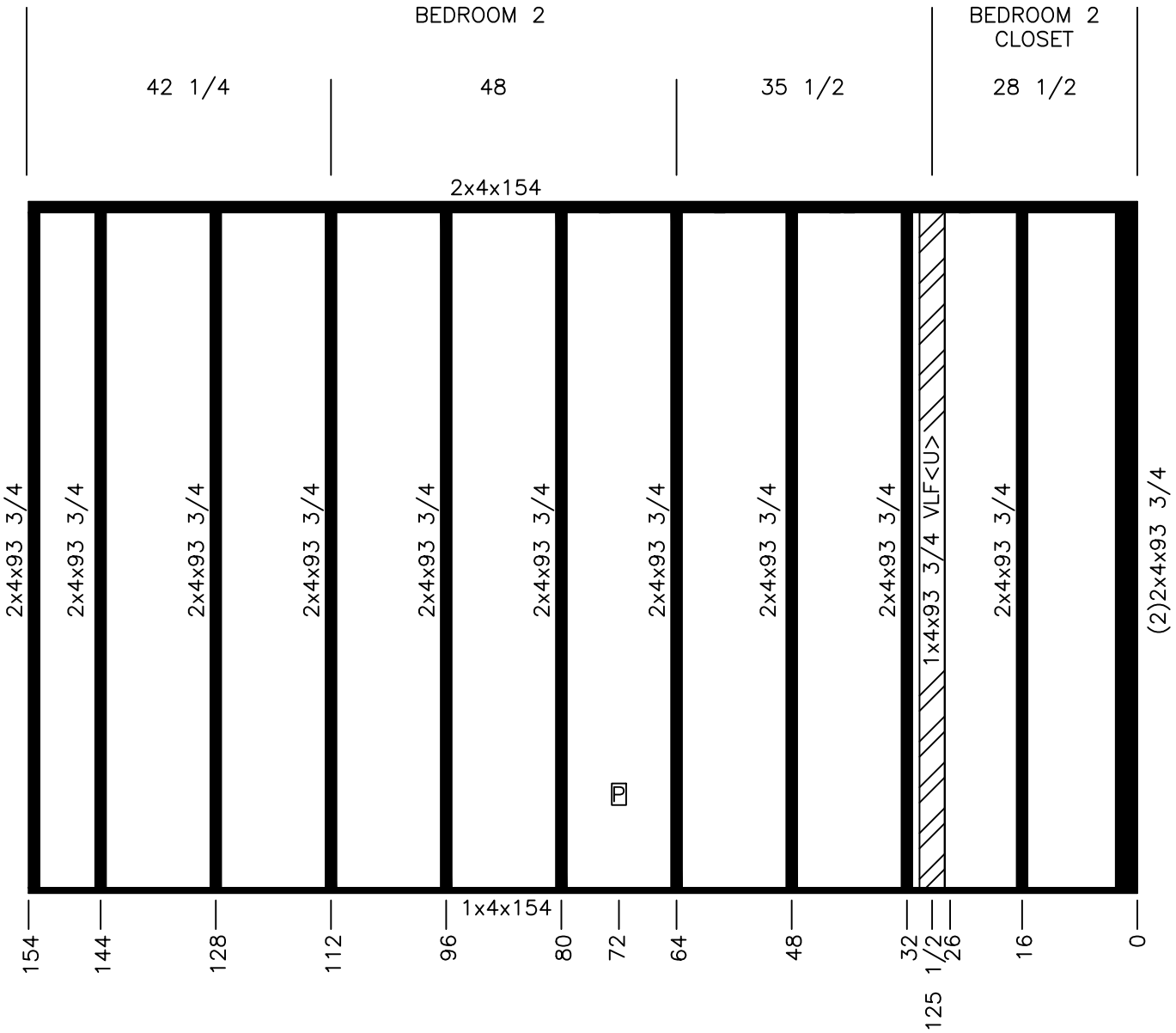

CUTLIST		
QTY	SIZE	TYPE
1	154	1x4
1	154	2x4
12	93 3/4	2x4
1	93 3/4 VLF<U>	1x4

STUD SPACING 16"

Clayton HOMES	Model #: MTN28523A		Drawing #: 34M401
	Date: 05/11/2026	Scale: N.T.S.	
Product Designer: B.R.K.	Model: 28' x 52' Mountaineer		
WALL 34			Rev:

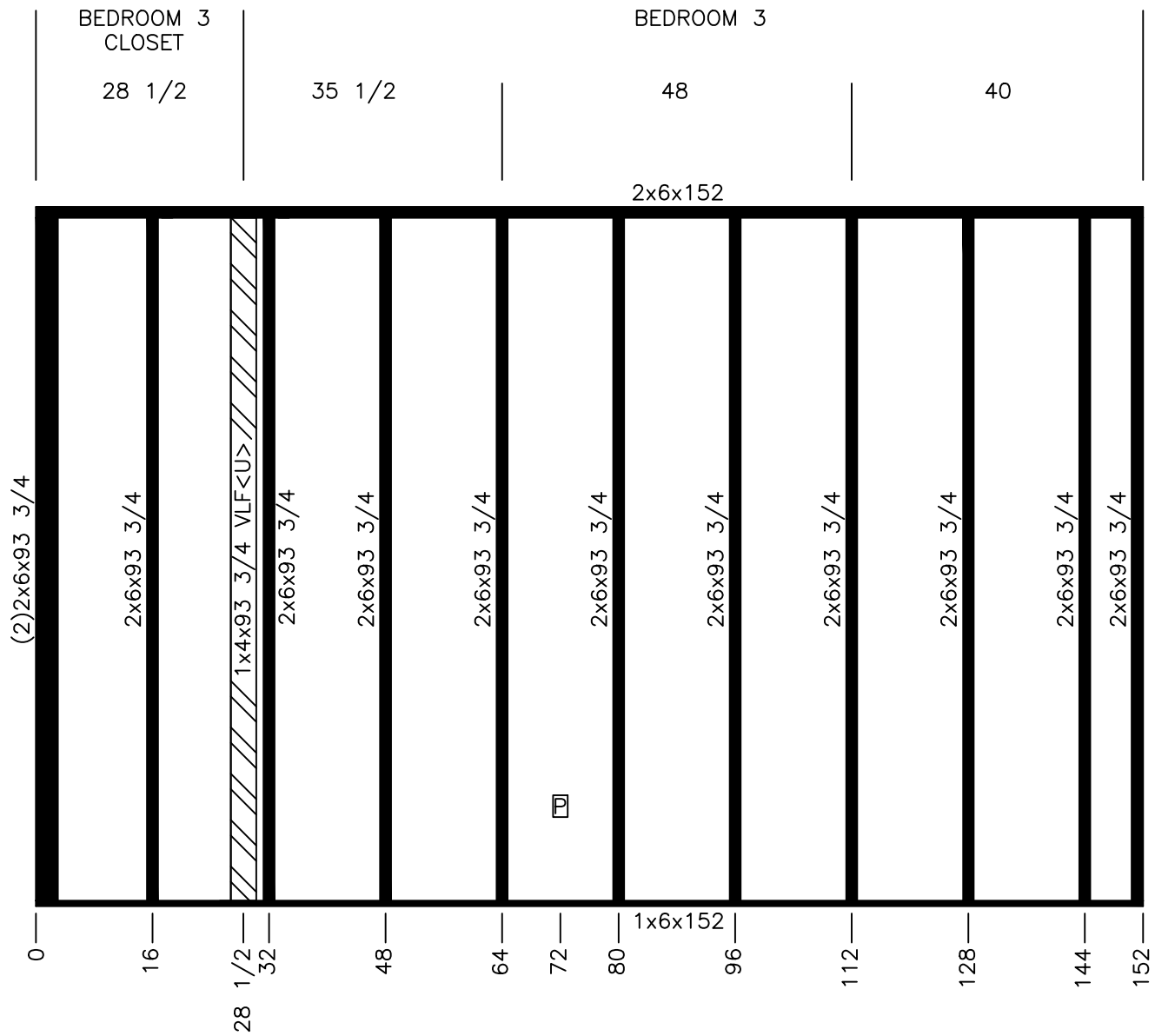

CUTLIST

QTY	SIZE	TYPE
1	152	1x6
1	152	2x6
12	93 3/4	2x6
1	93 3/4 VLF<U>	1x4

STUD SPACING 16"

Clayton HOMES	Model #: MTN28523A		Drawing #: 34M401
	Date: 05/11/2026	Scale: N.T.S.	
Product Designer: B.R.K.	Model: 28' x 52' Mountaineer		
WALL 35			Rev:

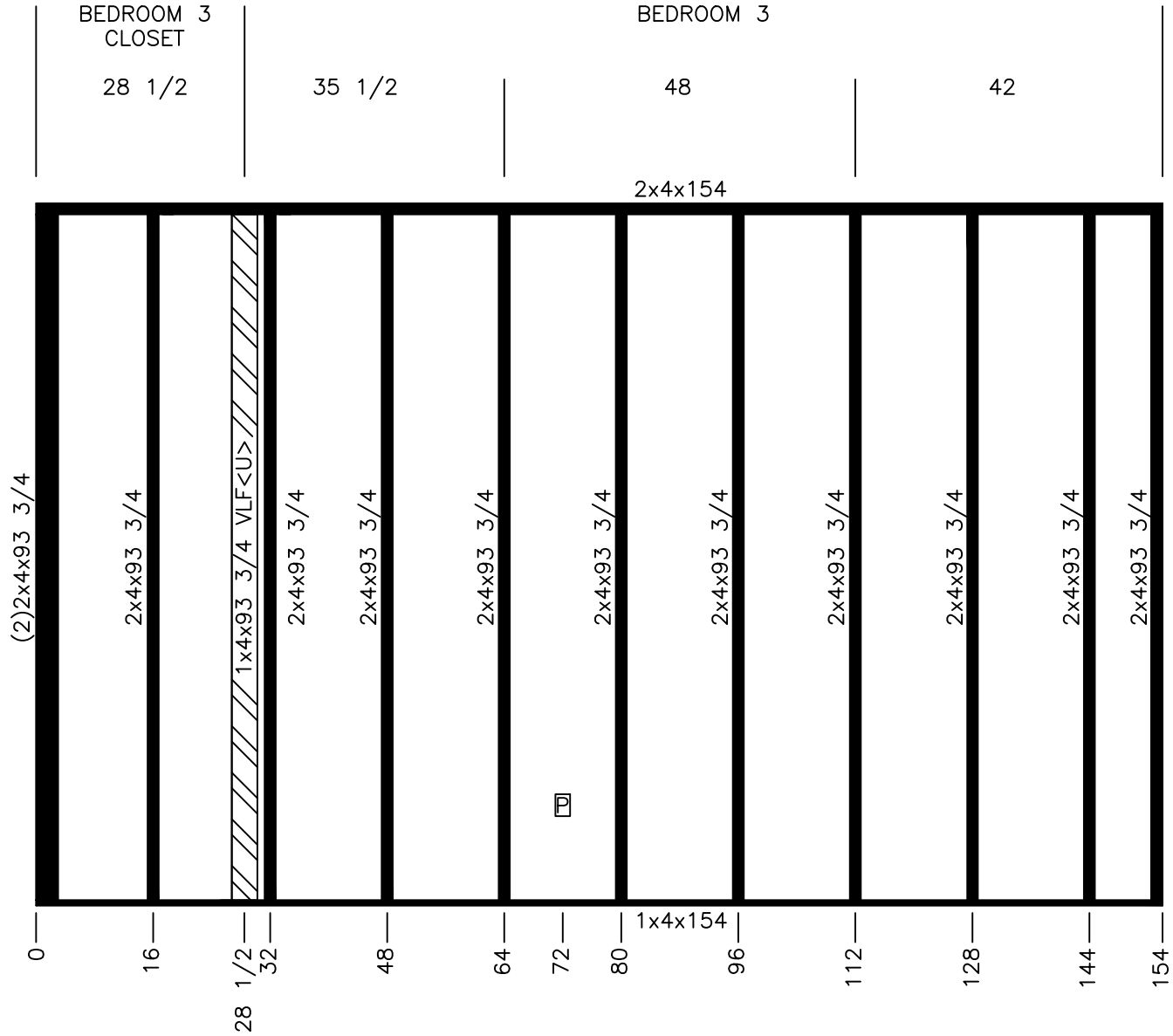

CUTLIST		
QTY	SIZE	TYPE
1	154	1x4
1	154	2x4
12	93 3/4	2x4
1	93 3/4 VLF<U>	1x4

STUD SPACING 16"

Clayton HOMES	Model #: MTN28523A		Drawing #: 34M401
	Date: 05/11/2026	Scale: N.T.S.	
Product Designer: B.R.K.	Model: 28' x 52' Mountaineer		
WALL 35			Rev:

OFFICE OPTION FOR BEDROOM 3

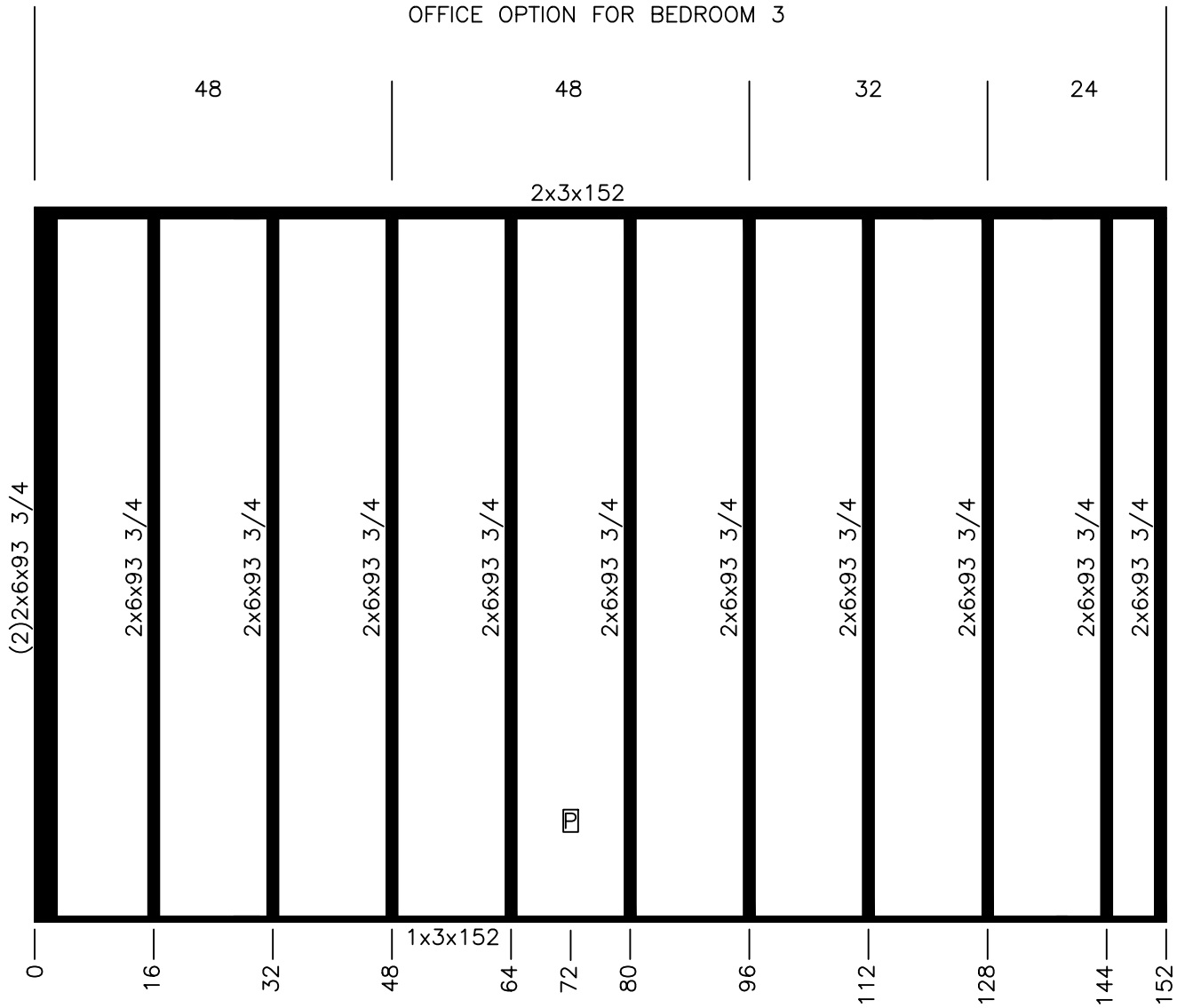

CUTLIST

QTY	SIZE	TYPE
1	152	1x6
1	152	2x6
12	93 3/4	2x6

STUD SPACING 16"

Clayton HOMES	Model #: MTN28523A		Drawing #: 34M401
	Date: 05/11/2026	Scale: N.T.S.	
Product Designer: B.R.K.	Model: 28' x 52' Mountaineer		
WALL 35A			Rev:

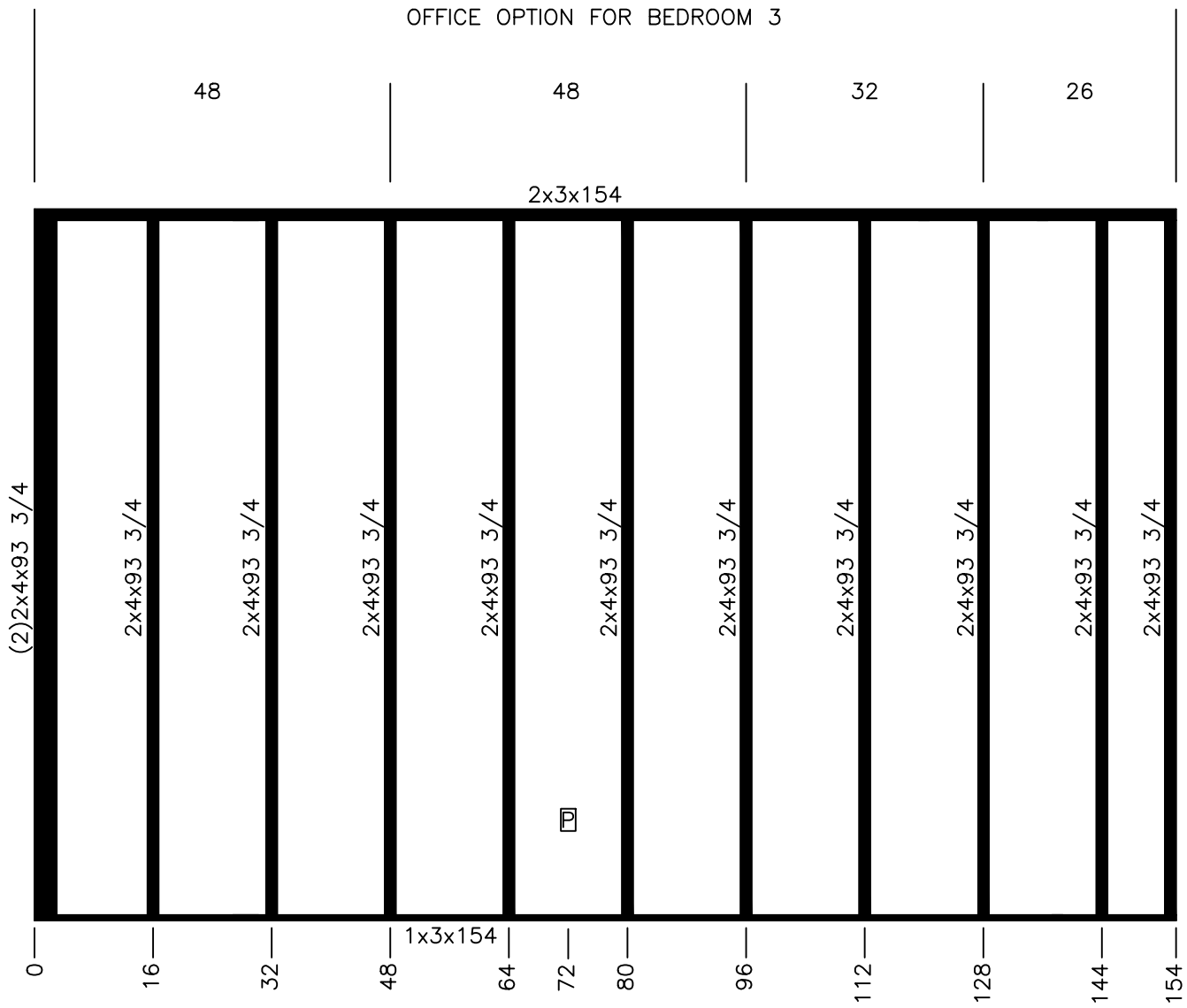

CUTLIST		
QTY	SIZE	TYPE
1	154	1x4
1	154	2x4
12	93 3/4	2x4

STUD SPACING 16"

Clayton HOMES	Model #: MTN28523A		Drawing #: 34M401
	Date: 05/11/2026	Scale: N.T.S.	
Product Designer: B.R.K.	Model: 28' x 52' Mountaineer		
WALL 35A			Rev: